DoALL®

INSTRUCTION MANUAL

MODEL: 16-1, 16-2, 16-2A
26-2
36-2, 36-2A
60-2

BAND SAWING MACHINE

DAMAGE CLAIM PROCEDURES

VISIBLE DAMAGE AT THE TIME OF DELIVERY:

1. Note damage on carrier's delivery receipt. Accept the shipment. It can be returned later if repairs are not possible in the field.

2. Request a "damage inspection" from the delivery carrier:

   a. The carrier will send his own people or contract an independent agency to make the inspection.

   b. The inspector will request a signature on the report and leave a copy.

   c. The carrier "damage inspection" report is not final. If additional damage is found when repairs are started, contact the carrier for another inspection; or at least give them the details of the damage.

3. Do not move the equipment from the receiving area and keep all shipping materials until carrier "damage inspection" report is complete.

4. If possible, take photographs of the damage and keep them for your files. Photos could possibly prove a claim at a later time.

5. Keep a record of all expenses and be sure they are documented.

6. Repair damage in the field whenever possible. Carriers encourage this to keep expenses down.

7. You have nine (9) months to file a claim.

CONCEALED DAMAGE:

1. You have fourteen (14) days to report damage not noted at time of delivery.

   a. Report damage as soon as possible. This makes it easier to prove that it did not happen at cosignee's plant.

   b. Inspect machine(s) carefully before moving from the receiving area. Again, if machine is not moved, it is easier to prove your case.

2. Request a "damage inspection" from the delivery carrier:

   a. The carrier will send his own people or contract an independent agency to make the inspection.

   b. The inspector will request a signature on the report and leave a copy.

   c. The carrier "damage inspection" report is not final. If additional damage is found when repairs are started, contact the carrier for another inspection; or at least give them the details of the damage.

3. Do not move the equipment from the receiving area and keep all shipping materials until carrier "damage inspection" report is complete.

4. If possible, take photographs of the damage and keep them for your files. Photos could possibly prove a claim at a later time.

5. Keep a record of all expenses and be sure they are documented.

6. Repair damage in the field whenever possible. Carriers encourage this to keep expenses down.

7. You have nine (9) months to file a claim.

MACHINE SPECIFICATIONS

MODEL [ ] **SERIAL NO.** [ ]

VOLTAGE [ ] **CYCLE** [ ] **PHASE** [ ]

For your information and future reference, insert pertinent data concerning your machine in the spaces provided above. This information is stamped on the data plate attached to the machine frame.

Always specify machine model and serial number on all parts orders and correspondence concerning your machine. This will help avoid unnecessary delays and inconvenience during processing.

The specifications contained herein were in effect at the time this manual was approved for printing. The DoALL Company, whose policy is one of continuous product improvement, reserves the right, however, to change specifications or design at any time without notice and without incurring obligations.

How to read your serial number:

Example: 500-001234

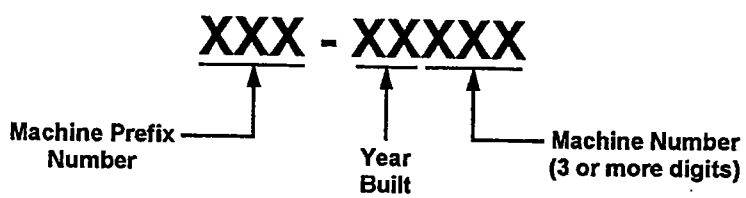

DoALL COMPANY
254 NORTH LAUREL AVENUE
DES PLAINES, ILLINOIS 60016 U.S.A.

YOUR SERVICE REPRESENTATIVE:

Contour

Contour-Matic

Utility

WARNING

TO AVOID POTENTIAL HAZARDS, OBSERVE THESE PRECAUTIONS WHEN OPERATING OR SERVICING THIS MACHINE-OPERATOR MUST:

- READ INSTRUCTION MANUAL BEFORE OPERATING THIS MACHINE.
- WEAR SAFETY GLASSES.
- WEAR GLOVES WHEN HANDLING SAW BAND.
- NOT WEAR GLOVES WHEN OPERATING MACHINE.
- SET SAW GUIDES AS CLOSE TO WORK AS POSSIBLE.
- CLOSE BAND WHEEL COVERS BEFORE TENSIONING BAND OR STARTING MACHINE.
- CLOSE DOORS, REPLACE ALL COVERS AND SAFETY GUARDS BEFORE OPERATING MACHINE.
- USE A FIXTURE TO FEED WORK PIECE AND KEEP HANDS AWAY FROM MOVING SAW BAND.
- AVOID CONTACT WITH COOLANT. ESPECIALLY GUARD YOUR EYES.
- STEP TO ONE SIDE AND AWAY FROM WELDING UNIT BEFORE WELDING A SAW BAND.
- INSTALL FRICTION BAND AND SPARK SHIELD BEFORE FRICTION SAWING.
- USE A DUST COLLECTOR WHEN SAWING GENERATES DUST.
- DISCONNECT ELECTRICAL SUPPLY BEFORE REMOVING PANELS OR DRIVE COVERS.

MAKE SAFETY THE RULE AND FOLLOW SAFE SHOP PRACTICES.
ALWAYS CONSULT THE OPERATOR'S MANUAL PRIOR TO SERVICING.

404476

OPERATOR'S INSTRUCTION MANUAL

DoALL

CONTOUR MACHINES

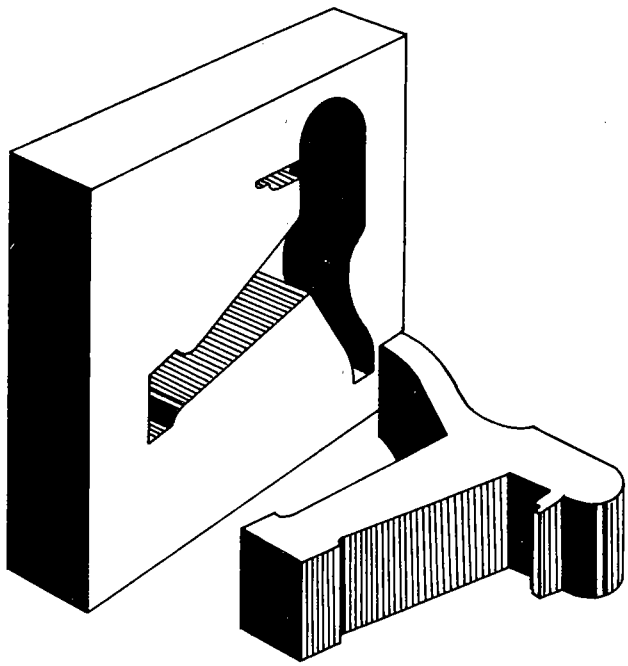

THE DoALL COMPANY

254 N. Laurel Ave., Des Plaines, Ill., U.S.A.

Cable Address, DoALL, Des Plaines, Ill.

Form No. PB-6 Rev. 11-58

PRINTED IN UNITED STATES OF AMERICA

FOREWORD

The fact that you are the owner of a new **DoALL** Contour Sawing, Continuous Filing and Polishing machine is, in itself, an indication that you have a keen appreciation of a well designed, carefully manufactured machine tool. The DoALL Company has the utmost confidence in the ability of your **DoALL** to fulfill your expectations. It has been designed to perform faithfully for many years to come and this will be assured by a few simple precautions on your part.

This book has been prepared to acquaint you with the things you should know to secure the utmost in economy and satisfaction. We hope you will take the few minutes required to read it, and keep the book readily available for reference in the event any question arises as to proper care of your **DoALL.**

The specifications contained herein were in effect at the time this book was approved for printing. The DoALL Company, whose policy is one of continuous improvement, reserves the right, however, to change specifications or design at any time without notice and without incurring obligations.

THE DoALL COMPANY
Des Plaines, Illinois

Your **DoALL** performs six functions in the precision removal of material to a desired shape or contour.

Three of these functions concern the cutting tools.
Sawing — Filing — Band Polishing.

The fourth — Automatic Butt Welder permits the welding of the saw into saw bands.

Fifth — Job Selector Dial indicates correct operating speeds for sawing, filing or polishing 55 basic materials.

Sixth — Variable Speed Control sets the machine running at the correct speed as indicated by the Job Selector Dial and operator's experience.

AN INVITATION

The DoALL Company maintains for your use the **DoALL Technical Institute** and **two laboratories.**

Training

The **DoALL** Technical Institute offers a course in **DoALL** operation, application and maintenance to employees of **DoALL** users in the form of a self-instruction book complete with typical work applications and their proper execution. This book is titled **"DoALL Contour Saws"** and is available to **DoALL** users.

Laboratories

These laboratories are equipped to handle your sawing or filing problems.

If you have a difficult cutting job, we would be glad to have you send samples of the material to our Saw-File Research Laboratories located at The DoALL Company, 254 North Laurel Ave., Des Plaines, Illinois. A research report will be sent you at the completion of the sawing or filing tests on the material. This report will show the proper saw or file to be used along with recommended feeds and speeds. The material tests will be returned to you for your inspection of the finished results obtained on the test. This free service can easily be arranged through your local DoALL representative.

If you have a difficult job to machine and wish to have us analyze the job for **DoALL** application, send drawings and sketches to the DoALL Company, 254 North Laurel Ave., Des Plaines, Illinois. You will receive a report including proper procedure for setting up your **DoALL** to handle the job. Estimates of cutting time and recommended attachments will be given for your job. These will be based on actual job experience at other plants having similar work.

INDEX

Page

INSTALLATION

Location 10
Alignment 10
Final Unpacking 11
Electrical Installation 11
Initial Lubrication 11

OPERATING FEATURES

Job Selector 13
Table Tilt 13
Saw Wheels 13
Variable Speed and Shift 13
Ratchet Feed 14
Weight Type Power Feed 14
Butt Welder 15

OPERATION

Length of Blade 19
Welding the Saw 19
Annealing the Blade 20
Grinding the Blade 21
Setting Up the Saw Guides 21
Tracking and Tensioning the Blade . . 21
Sawing 22
Selection of File Band 24
Setting Up for Filing 25
Joining the File Band 25
Tracking and Tensioning the File Band 26

Page

OPERATION—Cont.

Removing the File Band 26
Band Polishing and Grinding 27

MAINTENANCE

Points of Wear 29
Butt Welder 30
Lubrication 32

ATTACHMENTS

Hydraulic Contour Feed 35
Hydraulic Auxiliary Table 36
Heavy Work Slide 37
Heavy Work Clamps 37
Rip Fence 38
Bevel Rip Fence 38
Cut-off and Miter 38
Mitter Attachment (Filler Plate Mounting) 39
"All Purpose" Miter 39
Spiral Saw Guides 40
Angle Saw Guides 40
File Adapter Plate 40
Disc Cutter 41
Magnifier 41
Saw Eez 42
Saw Lubricator 42
Etching Pencil 42

MODEL 16-2

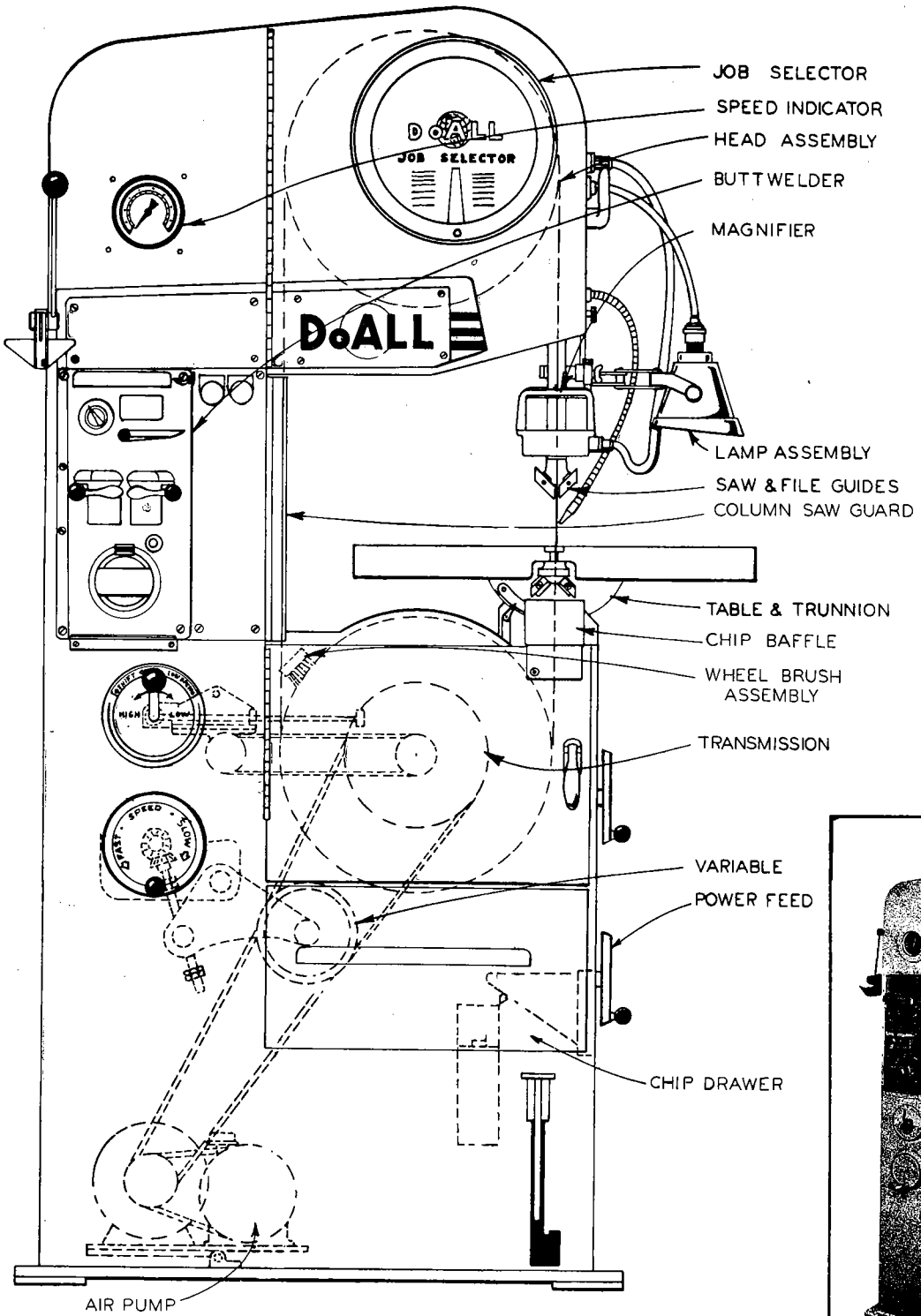

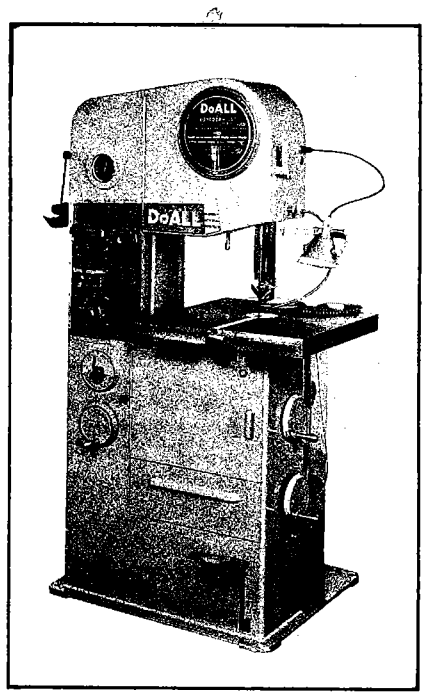

Figure 1

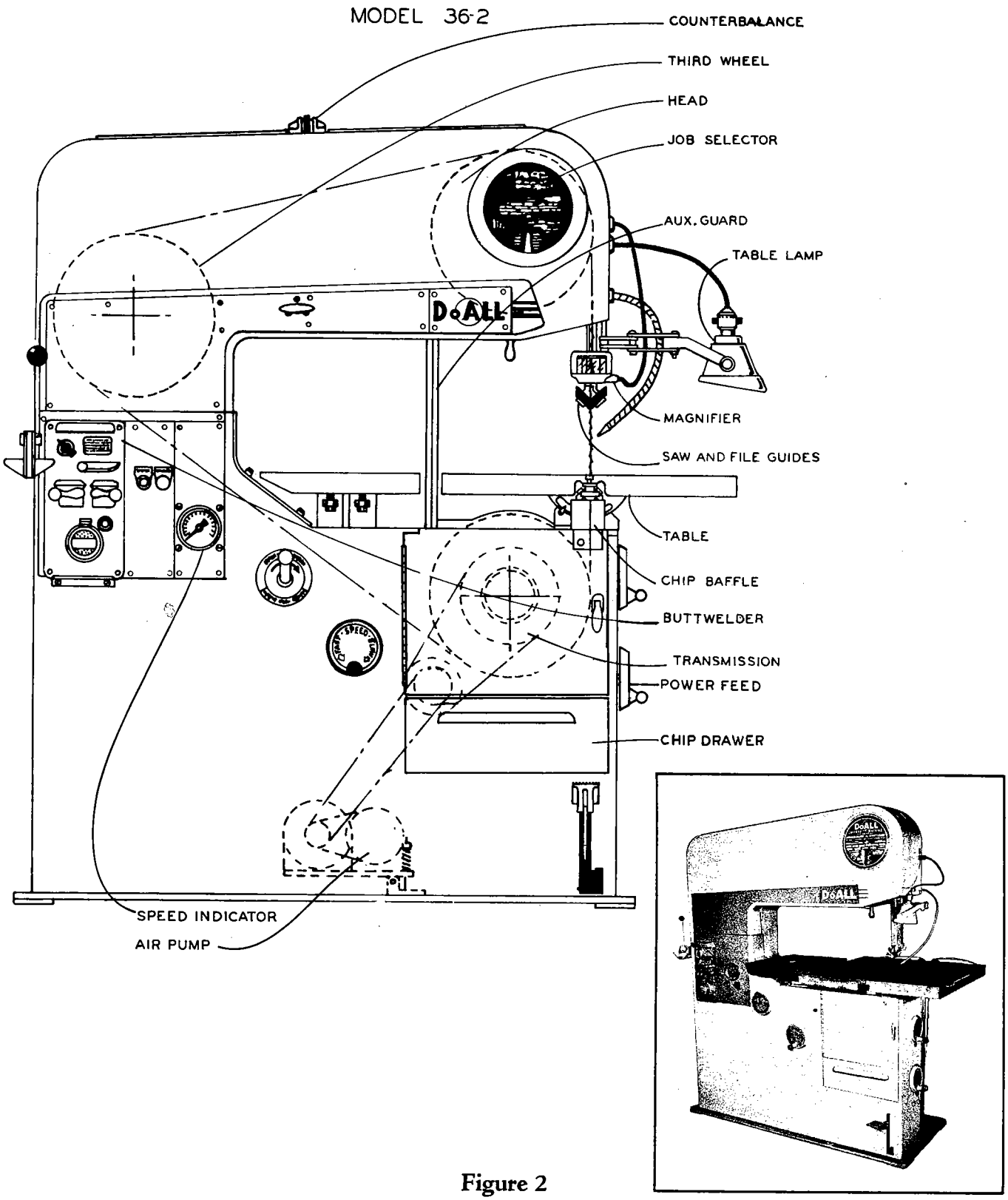
MODEL 36-2
COUNTERBALANCE
THIRD WHEEL
HEAD
JOB SELECTOR
AUX. GUARD
TABLE LAMP
MAGNIFIER
SAW AND FILE GUIDES
TABLE
CHIP BAFFLE
BUTTWELDER
TRANSMISSION
POWER FEED
CHIP DRAWER
SPEED INDICATOR
AIR PUMP
DoALL

Figure 2

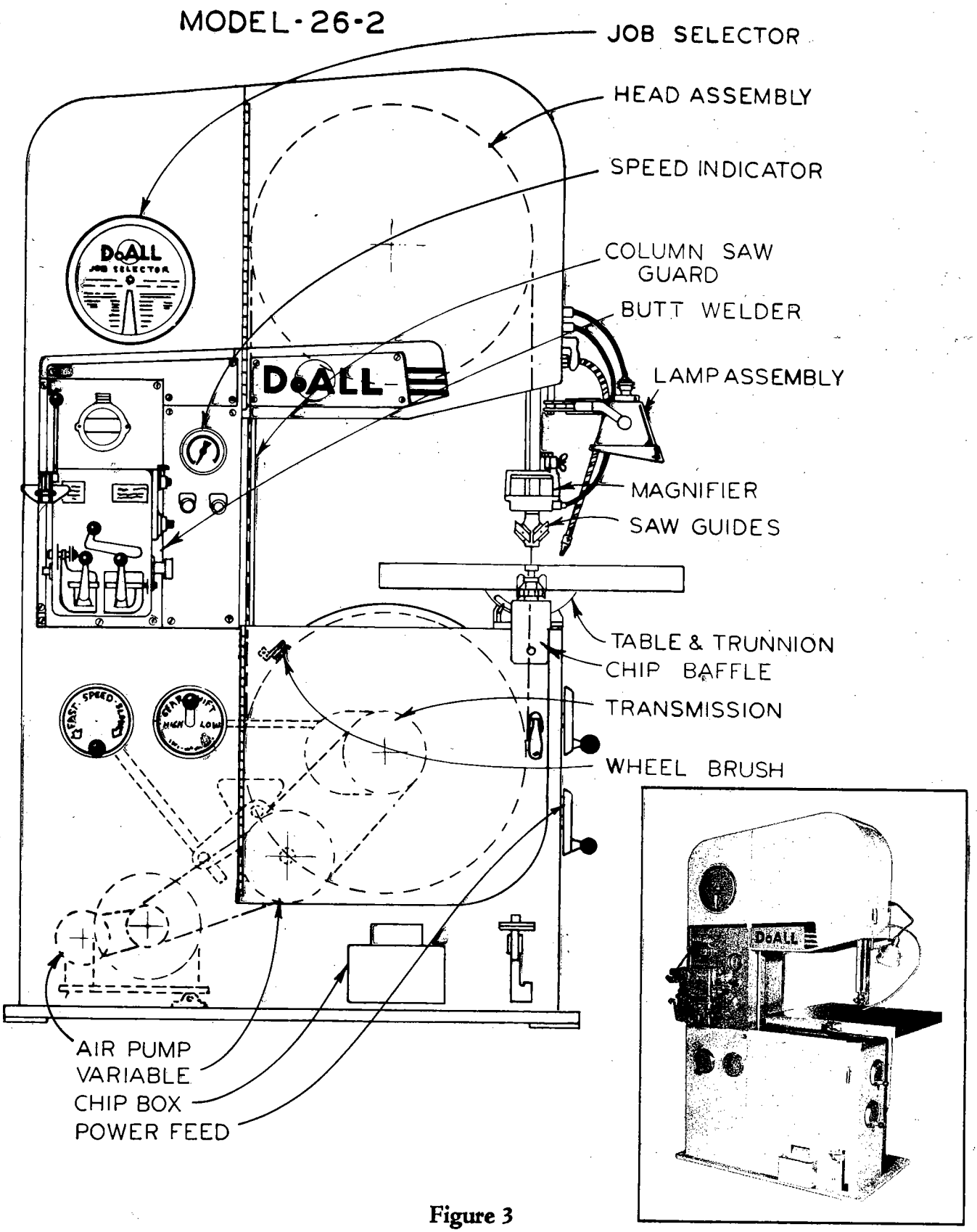
MODEL-26-2
JOB SELECTOR
HEAD ASSEMBLY
SPEED INDICATOR
COLUMN SAW GUARD
BUTT WELDER
LAMP ASSEMBLY
MAGNIFIER
SAW GUIDES
TABLE & TRUNNION
CHIP BAFFLE
TRANSMISSION
WHEEL BRUSH
AIR PUMP
VARIABLE
CHIP BOX
POWER FEED
DoALL
JOB SELECTOR
FAST SPEED
GEAR SHIFT
HIGH
LOW

Figure 3

MODEL 60-2

THIRD WHEEL
JOB SELECTOR
BUTT WELDER
HEAD
AUX. GUARD
MAGNIFIER
TABLE LIGHT
SAW GUIDES
TABLE & TRUNNION
CHIP BAFFLE
TRANSMISSION
POWER FEED
CHIP BOX
SPEED INDICATOR
GEAR SHIFT
SPEED CHANGE UNIT
AIR PUMP
VAPIABLE SPEED UNIT

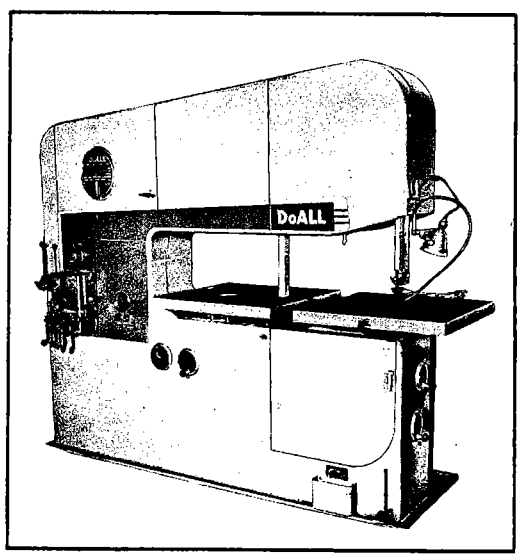

Figure 4

INSTALLATION

LOCATION

The machine should be placed so that the light will strike the table from over the operator's right shoulder when he is in position for sawing, over his left shoulder when he is filing, as shown in Fig. 5.

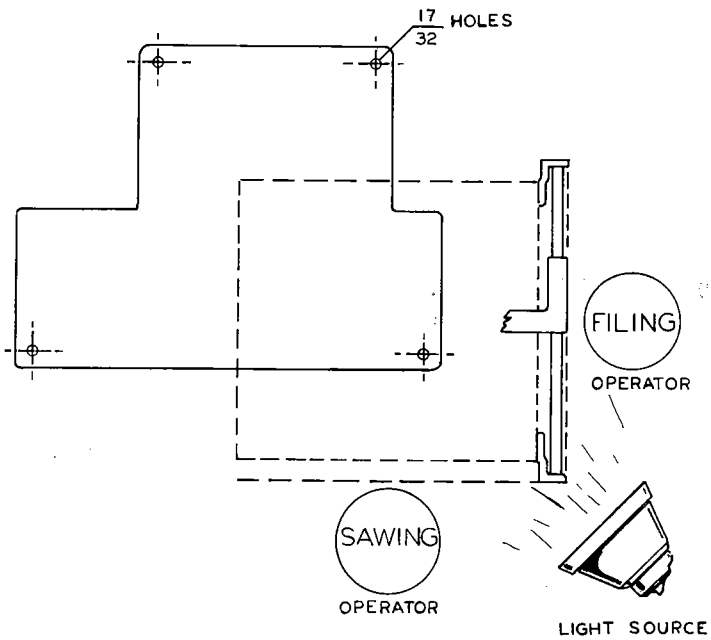

Figure 5

When used for tool making, the **DoALL** should be as near the toolmakers' benches as possible. In this location, it can be used readily for many small jobs such as cutting off small parts, cutting templates, developing blanks, etc. Where large work is to be machined, sufficient clearance around the machine should be provided.

ALIGNMENT

The **DoALL** should be bolted rigidly to the floor and should be levelled to insure against springing the frame out of alignment. Three-fourths inch holes are located on the flanged base of the machine for bolting. If the floor is rough or not level the machine should be aligned by shimming as follows:

1. If table is on machine, remove filler plate from table. Remove post saw guard from upper post and shift machine into neutral.

2. Place a ½″ saw band on wheels and tension so band is tight. Adjust tilt screw, if necessary, so the center of the blade rides directly on the crown of both tires with the blade centered on the wheel tire.

3. If necessary, shim the base of the machine until the band runs parallel to the face of the post. The center of the blade will be 2 inches from the face of the post. The blade must also run in a line even with the center of the post when viewed from the front of the machine. All dimension checks should be made at both upper and lower ends of post with post in lowered position.

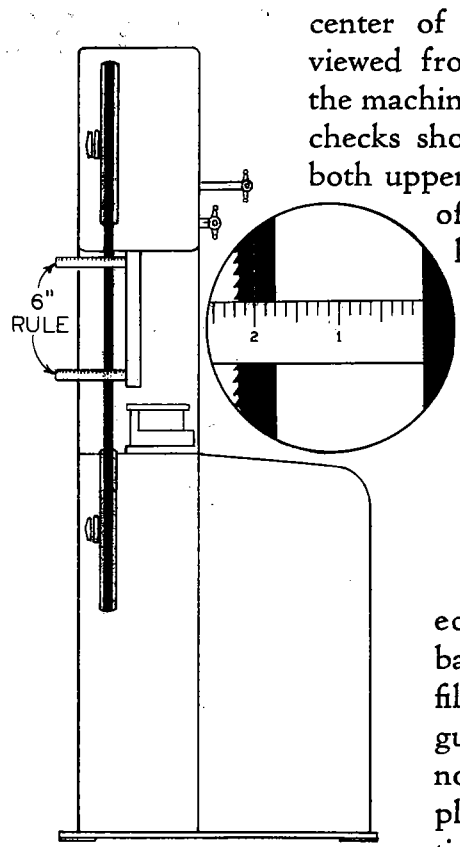

Figure 6

4. When aligned, remove saw band and replace filler plate and saw guard. If table was not on machine, place table in position on trunnion and fasten loosely with four hex cap screws. Lower post to lowest position, clamp a straight edge to side of post and align table so filler plate slot is parallel to side of post. Then tighten cap screws.

5. Loosen trunnion lock by means of the

table lock handwheel on the frame below the table.

6. Square the work table to the upper post, and if necessary adjust the trunnion pointer to zero.

FINAL UNPACKING

After the machine has been securely bolted to the floor and aligned, remove the wire securing the upper wheel or wheels to the frame. Then remove the rear cover which encloses the drive mechanism. If the machine has the weight-type power feed described under operating features on page 14, the bracket that secures the weight to the base of the machine must be removed.

The block of wood that has been placed under the motor to remove tension on the V-belts must also be removed. Belt tension should be regulated by adjusting the spring tension on the motor base, so that the belt is just tight enough to prevent slippage between the belt and the motor pulley.

ELECTRICAL INSTALLATION

If a motor and switch are furnished with the machine, your line circuit can be directly connected to the wires from the outlet box. Follow the wiring diagram included in the literature envelope. Be sure your lines are not overloaded and are heavy enough to carry the required amperage. At 220 volts the 16-1, 16-2, 36-1 and 36-2 draw 20 amperes, while the 26-2 and 60-2 take 30 amperes.

Provisions for odd cycle AC power lines have been taken care of at the factory when so specified. For direct current, machines equipped with a drive motor have a converter unit to furnish the alternating current required for welding. This converter supplies 160 volt, 60 cycle current and cannot be used with a power line of different voltage. When a weld is to be made, the drive motor must be running to supply current. A 100-watt transformer is supplied for the lights.

INITIAL LUBRICATION

The transmission in the **DoALL** is splash-lubricated and must be filled with oil before the machine is operated. A quart of S.A.E. 20 transmission oil is included in the parts box shipped with the machine. Fill the transmission until the oil just begins to appear in the filler pipe elbow, shown under MAINTENANCE in Fig. 35. An oil level higher than this point may cause overflow which will be indicated by drippings under the transmission, or under the lower wheel of the machine.

OPERATING FEATURES

A complete understanding of the following operating features of the **DoALL** will greatly increase your ability to use it to best advantage. Before starting actual operation of the machine, the operator should thoroughly acquaint himself with these.

JOB SELECTOR DIAL

The job selector dial, mounted on the upper door of the **DoALL**, enables quick selection of the correct saw bands, file bands, feeds and speeds used in the machining of various basic materials. A study of this dial will familiarize the operator with the machine's different working capacities.

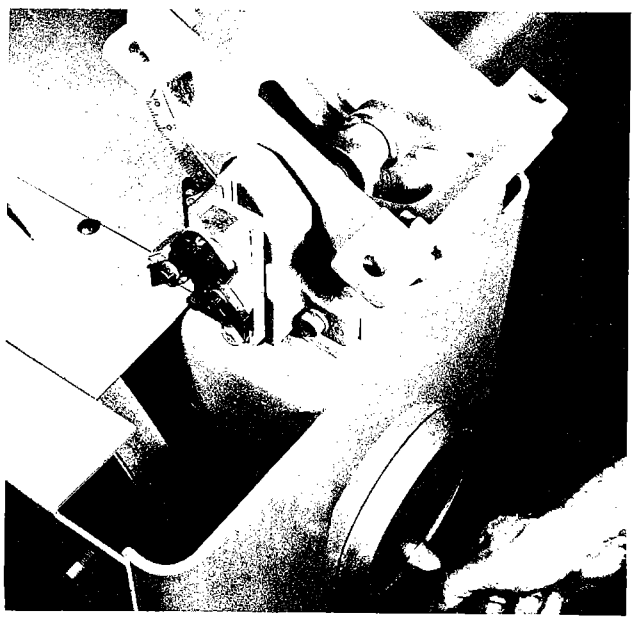

Figure 7

TABLE TILT

The work table shown in Fig. 7 is mounted on a single trunnion, providing adjustment of 10 degrees to the left and 45 degrees to the right. A handwheel extending out from under the frame of the table turns counterclockwise to unlock the table. A pointer and a degree segment are attached directly to the trunnion and cradle to indicate the angle at which the table is set.

STAR WHEELS

The saw carrier wheels are accurately balanced and centered. They are arranged with a crown face, that is, the center of the rim of the wheel is higher than the outside edges. This crown face, shown in Fig. 8 causes the saw and file bands to ride properly on the wheels. The wheels are covered with tires of oil-resistant rubber impregnated into a fabric or metal backing. These tires eliminate wear on the saw teeth and will last for a long time with proper care.

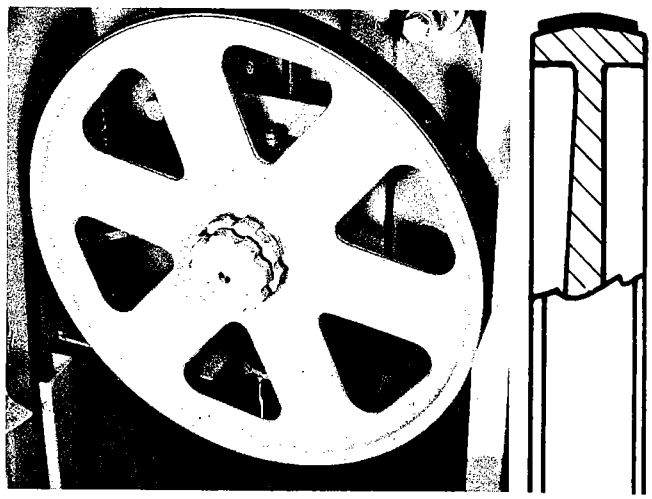

Figure 8

To facilitate putting the band on the wheel so that it will move properly through the saw guides, Fig. 8 shows how the upper saw wheel is tiltable in and out as well as adjustable up and down. On models 36 and 60 both the upper saw wheel and rear saw wheel are adjustable. The upper idler wheels on these models have been carefully aligned at the factory and need no further adjustment.

VARIABLE SPEED HANDWHEEL AND SHIFT (Fig. 10)

The handwheel controls a Speedmaster unit connected to the motor by a V-belt. It makes infinitely variable speeds possible. On the single speed models it will change the

speed from 50 to 300 feet of saw travel per minute. The two and three speed machines have gear shifts controlling the transmission ratio which allow higher speed ranges. Speed ranges for the two speed machines are: Low, 50 to 300 F.P.M., High - 300 to 1500 F.P.M. Speed ranges for three speed machines are: Low - 35 to 175 F.P.M., Medium - 140 to 1000 F.P.M., High - 840 to 6000 F.P.M. In the overlapping speed range, use the lower gear when maximum power is needed, otherwise use the higher speed range to insure longer belt life.

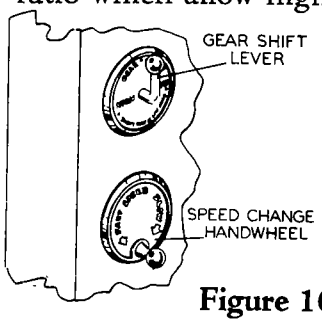

Figure 10

When stopping machine, turn speed change handwheel to lowest speed to prevent excessive belt wear and damage to transmission.

Shift only at slowest speed.

RATCHET FEED (Fig. 11)

This is used for sawing heavy sections where manual feeding becomes tiring.

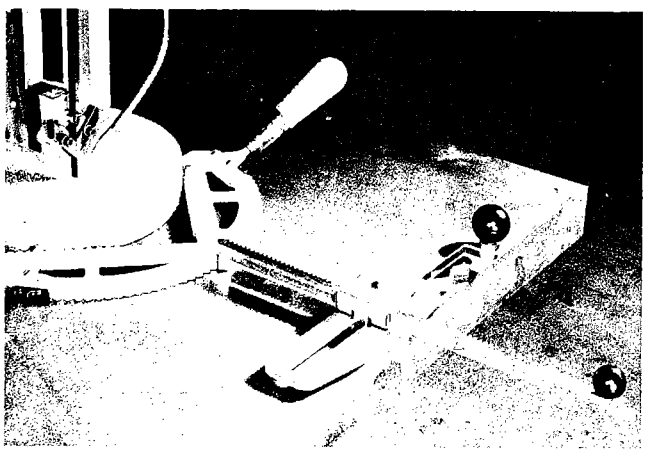
Figure 11

It consists of a ½″ square steel rack gear with a hardened point which forces the work into the saw by means of a hand-operated ratchet lever and gear assembly. It allows 12″ of forward travel, advancing approximately 1⅞″ with each stroke of the ratchet lever. To permit contour cutting it has a cross-travel of 3¼″ each way from the center line of the table.

The ratchet table-feed is mounted by means of two studs in the base plate which set into two holes in the filler plate. The filler plate can be extended 2½″ from the edge of the table to allow cuts longer than the distance from the saw to the edge of the table to be made.

The rack gear can be readily adjusted from one position to another by pressing the thumb lever forward and sliding the rack gear into position. Releasing the thumb lever re-engages the gears. Using the work-holding jaw helps keeps the work in correct alignment.

WEIGHT TYPE POWER FEED
(Figs. 12 and 13)

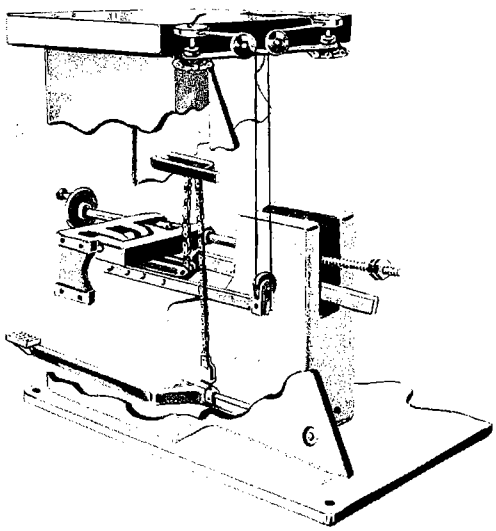
Figure 12

The weight-type power feed is an automatic feed which allows the operator to use both

hands to guide the work without having to push it.

A weight on a beam within the machine pulls the work-holding chain to feed the work against the blade. The position of the weight on the beam determines both the rate and pressure of feed. Turning the handwheel clockwise on the side of the base changes the position of the weight on the beam to reduce the pressure and rate of feed. Turning the handwheel counter-clockwise increases them. At the maximum rate of feed, when the handwheel is in the farthest counter-clockwise position, pressure against the blade is 75-80 pounds.

This maximum setting should be used only for sawing at high speeds on wood or other fast cutting materials, and only when using saws ¼″ or wider. For all regular work on steel and non-ferrous metals, a pressure of from 35 to 45 pounds should be used. With saws ⅛″ wide or less, the pressure should always be reduced to a minimum. A greater speed can be used when cutting straight lines than when cutting curves. The feed should be adjusted to a rate that gives maximum cutting speed for each particular job without over-straining the blade.

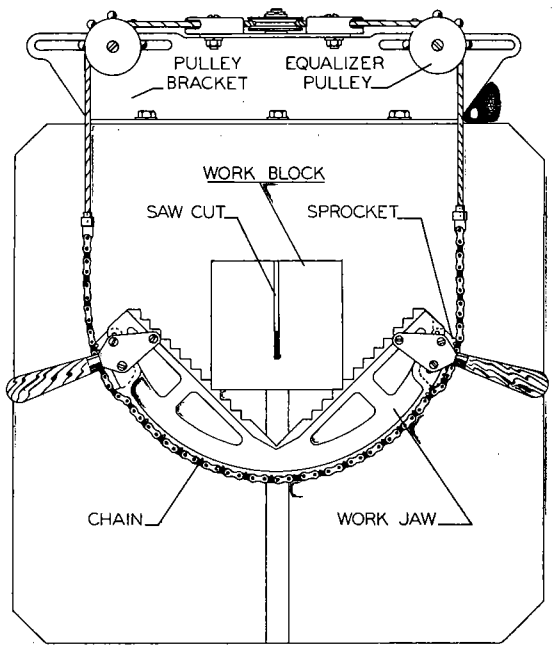

Figure 13

The foot-pedal at the botttom of the machine releases the pressure and stops the feed without the operator having to remove his hand from the work. Pressures of less than 25 pounds can be obtained by shifting the weight on the beam to its lowest pressure and then putting partial pressure on the foot pedal. On large work where the cut is longer than the 10″ maximum feed distance, the weight is brought back into position by pressing the foot pedal into the notch at the bottom of the foot-pedal slot and taking up the slack in the work-holding chain.

When the power feed is not in use, the foot-pedal should be left in the upper position. This guards against injury to the operator and machine if the foot pedal should be accidentally dislodged from the notch.

BUTT WELDER

The general arrangement of the Butt Welder Panel Assembly is shown in Fig. 14.

On the machine column near the welder is a blade shear. This is a lever-operated cam type shear which cuts the blades squarely to prepare them for welding.

The two clamping jaws of the welder hold the butted saw ends together. When the welding switch lever above them is depressed, an electric current is induced through the butted ends, creating enough heat to soften them. Depressing the welding lever also releases a spring which causes the jaws to squeeze the blade ends together. When the right hand jaw has moved .052 inches toward the other jaw the electric current is automatically cut off. The spring tension on the jaws

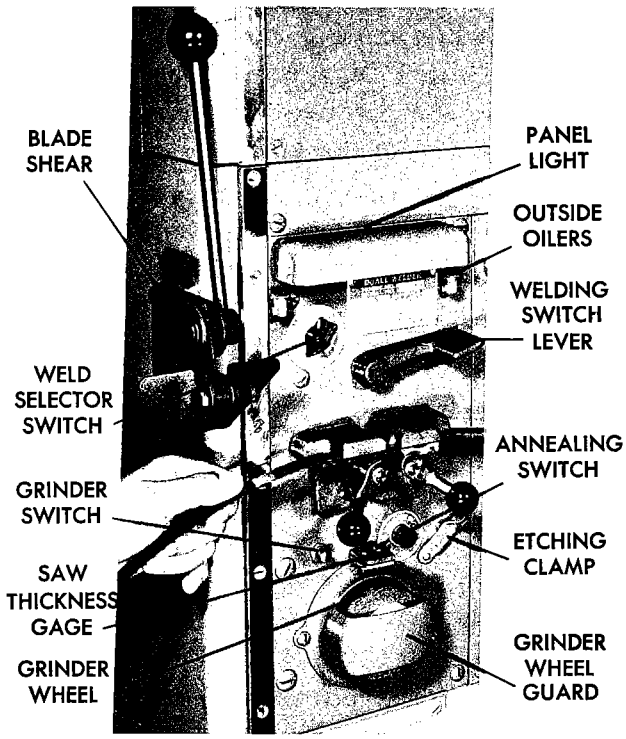

Figure 14

is released when the lever is released. The operator should not hold the welding jaws when depressing the welding lever since this might interfere with their free movement.

Wider saw bands need greater pressure between the jaws than narrow ones, and since too much pressure on small saws will cause climbing or lapping of the ends, a weld selector switch provides variable pressure control.

Directly below the clamping jaws is the annealing switch. When the band is heated up in the butt welding process, the steel at the point of the weld air hardens and is brittle. It is necessary to anneal the weld by reheating and allowing it to cool slowly. This returns the blade to an approximation of its original temper.

The welding switch is a two-circuit switch on which the annealing circuit is normally closed and the welding circuit normally open. When the welding lever is held down, there is no possibility of "shorting" the transformer or burning out fuses should the annealing switch accidentally be pressed. An etching clamp holds the annealing switch down to supply current for the etching pencil described under ATTACHMENTS.

Below the clamping jaws and annealing switch is a grinding wheel for removing excess metal or "flash" from the weld. The wheel guard is exposed at both top and bottom to permit grinding both sides of the weld. A gage above the switch is used to check for complete removal of the flash. The saw weld should pass freely through the gage.

The grinder circuit is coupled through the annealing side of the welder switch. When the welding lever is depressed, the circuit to both the annealing switch and the grinder is open. If the grinder is running while a weld is being made, the grinder will momentarily shut off when the welding lever is depressed.

The following information will be helpful to those wishing to put in an AC line for operation of the standard butt welder on 1/16" to ¾" saws.

The transformer of the butt welder has the following characteristics:

Instantaneous Primary Current
28 Amperes or 2850 Watts
Instantaneous Secondary Current at
Maximum Setting — 880 Amperes
Secondary Voltage — 3.5 Volts
Continuous Duty Rating — 500 Watts

A separate instruction manual explains the model DBW-5 Welder which is standard equipment on Models 26-2 and 60-2 **DoALL** Saws.

OPERATION

SAWING OPERATION

Selecting The Saw Blade

A special **DoALL** plant located in Des Plaines, Illinois is devoted entirely to the manufacture of band saw blades, band files and line grinding bands. The tremendous variety and range of band cutting tools assures the finest possible results from your machine.

Figure 15

To fully understand the range of tasks your machine can perform, the **DoALL** Band Tool Manual should be consulted regularly. There, the results of years of experimentation are listed in tables and charts, showing exactly how to get the maximum in performance from your blades.

For general metal cutting and wood working, the job selector dial on your machine will serve as a guide. While there are 15 basic types of **DoALL** band tools to be used on the machine, three of these, the precision saw, the buttress saw and the claw tooth saw will serve most shop purposes.

DoALL Precision saws always come in a blue box. They are designed for fine precision cutting of metals. Buttress saws were developed for faster cutting of wood, plastics and non-ferrous metals. They are also used for extremely heavy work thicknesses of ferrous-type alloys. They have a coarser pitch than the precision saw and they are packaged in a red box. The claw tooth saw bands differ from other hard edge flexible-back bands in that the teeth have a positive rake angle. The durability of the hard edge plus the faster penetration of the forward slanting teeth results in a band of superior performance for many operations.

These three types of saws are offered in the following combinations:

		PRECISION SAWS												BUTTRESS SAWS				CLAW TOOTH SAWS			
		Pitches—(Raker Set)							Pitches—(Wave Set)					Pitches				Pitches			
WIDTH IN INCHES	GAGE IN INCHES	6	8	10	12	14	18	24	8	10	12	14	32	2	3	4	6	2	3	4	6
		THICKNESS OF SET							THICKNESS OF SET					THICKNESS OF SET				THICKNESS OF SET			
1/16	.025							.038					.038								
3/32	.025						.042						.042								
1/8	.025					.043	.042	.042													
3/16	.025			.044		.043	.042	.042					.042			.043					
1/4	.025			.044	.043	.043	.042	.042					.042			.043	.042			.044	.042
3/8	.025		.045	.044		.043	.042	.042							.045	.043			.046	.044	.042
1/2	.025	.045		.044		.043	.042	.042		.044		.043			.045	.043		.050	.048	.046	.042
5/8	.032		.055	.055		.054	.052	.050		.057		.057									
3/4	.032	.055	.055	.055	.054	.054	.052		.057	.057	.057	.057			.056			.058	.056		
1	.035	.058	.058	.058		.057				.063				.065	.061			.065	.060		

Types of tooth construction:

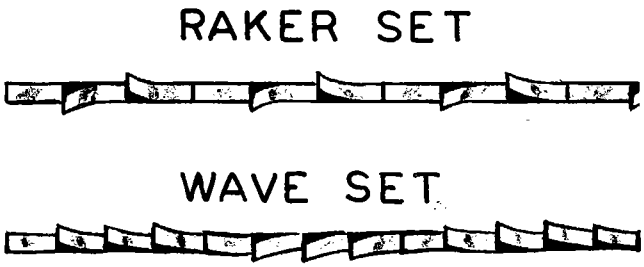

Figure 16

Saw pitch is the number of teeth per inch:

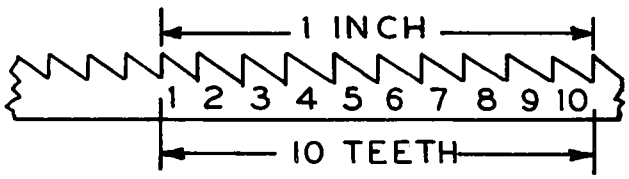

The following rules should guide selection of the saw:

1. The faster the velocity and the finer the saw pitch, the better the finish.
2. The thicker the material the coarser the the pitch. — (See Job Selector.)
3. The gummier the material the coarser the pitch.
4. The thinner the material the finer the pitch.
5. The more abrasive the material the slower the saw velocity.
6. The faster the velocity, and the heavier the feed, the faster the production.
7. Use the widest saw possible on all radii cutting.

MEASURING THE LENGTH OF BLADE

Precision, Buttress and Claw Tooth saw bands are available in cut and welded lengths to fit any band machine. They may be obtained in 100 foot and 500 foot coils in the exclusive "strip-out" containers. The lengths required for each machine may be measured by drawing them across the length of the work table. They can be cut either with a saw snips or with the blade shear on the butt welder. When cutting these saw lengths with the blade shear, start the cut on the back or non-cutting edge of the blade. This will keep the blades sharp longer.

Machine Model	Number Of Inches	Number of Lengths Of Work Table
16-2	120″	5
16-1	120″	6
36-1 2-wheel	120″	4
36-1 3-wheel	174″	5-4/5
36-2 2-wheel	120″	4
36-2 3-wheel	174″	5-4/5
26-2	177″	5-4/5
60-2 2-wheel	177″	5-4/5
60-2 3-wheel	267″	8-9/10

WELDING THE SAW

If saw snips have been used to cut the blade, square the saw ends before welding. Grind both ends of the saw in one operation as shown in Fig. 17. Hold the ends so that the teeth point in opposite directions. Regardless of the angle of grinding, the two ends will perfectly match when turned over.

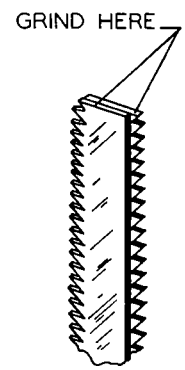

Figure 17

If internal sawing is to be done, the blade is inserted through the starting hole in the work and the ends of the saw are then ready to be clamped into the terminals of the butt welder.

Turn on the panel light, insert the saw between the jaws with the back against the aligning ledge at the back of the jaws as shown in Fig. 18.

This ledge lines up the saw, so that it will

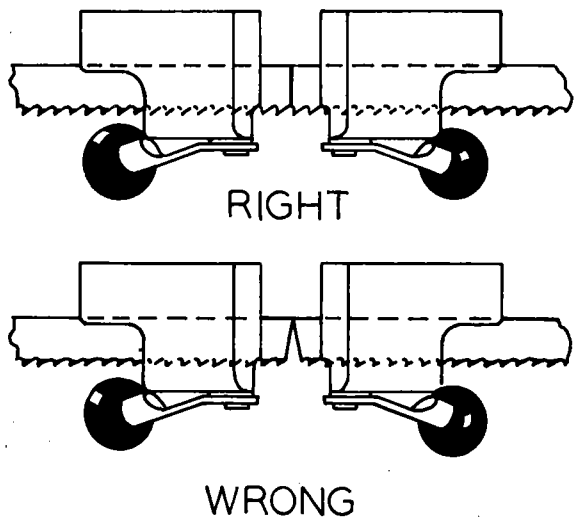

Figure 18

be in a straight line after welding. The ends of the saw should meet at the center of the welding gap without any offset either in thickness or across the width as shown in Fig. 19. If the ends are clamped in an offset manner an overlapping weld will result which will have to be ground too much, making the saw weak at the weld. If the contact across the width is not complete when the ends are clamped in the jaws, remove one end and

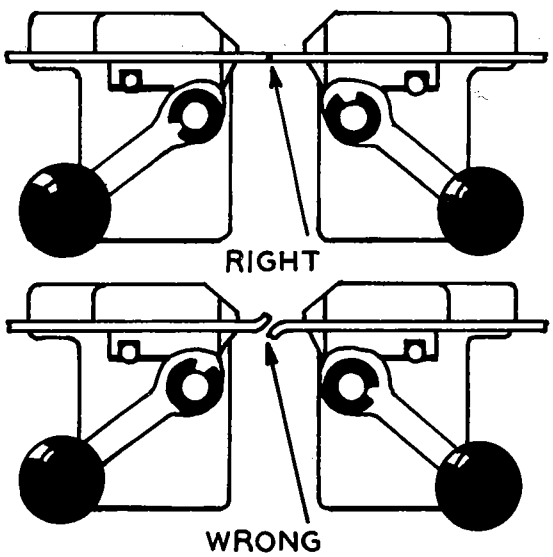

Figure 19

recut it. An incomplete joint will cause an incomplete weld.

After the saw ends are lined up, clamp them securely (but not so tightly as to injure the saw set) between the welder jaws. The tension control switch should be set to the correct position for the width of saw being welded. Use the narrow position for 1/16", 3/32" and ⅛"; medium for 3/16" and ¼", and wide for 5/16", 3/8", ½" and ⅝" wide saws.

Then press the operating lever to make the weld. The lever should be held down until the weld has cooled. Before releasing this lever, release the stationary jaw clamp to prevent scoring the welder jaw surface. When the lever is released, the butt welder mechanism and electrical switches are automatically recocked and the saw is then ready to be annealed.

Cut out old weld as each new weld is made. One weld only in a saw is recommended. Use the blade shear to cut away the small portion of the saw ends which become brittle during the butt welding process. Since the welding operation uses up no more than 1/16" of the blade, the band will not shorten appreciably even after several welds have been made. On Model 16-2 approximately 14" of saw blade can be used making welds. 6" on Models 36-2, 26-2 and 60-2.

If it is found after making a weld that the teeth of the band point in the wrong direction, the saw can be reversed by turning the band inside out. However, this cannot be done when the saw is welded through a piece of material for internal sawing. In this case, the saw must be cut and properly rewelded.

ANNEALING THE BLADE

To anneal the weld, unclamp the saw from the welding jaws, move it forward to the wide

gap position at the front of the welding jaws, and reclamp the saw just back of the saw teeth. Then press the annealing switch button until the saw comes up to a **dull** cherry red color. It is important that the weld be annealed properly or it will be too brittle to flex over the wheels. If the weld is allowed to get beyond a **dull** cherry red color, it will reharden causing the joint to be brittle. It is best to turn off the welder light when annealing a weld so that the "color heat" of the weld can be accurately determined. If heat color does not appear, it may be due to scale formed in welding. Remove this scale with abrasive. There may be oil or grease on the saw. This should be removed. These two items are often the cause of a slow anneal heat. Allow the saw to cool **slowly** by pressing the annealing button intermittently to prevent rapid air cooling.

GRINDING THE BLADE

After the weld is annealed, remove it from the jaws and grind off the flash on the small grinding wheel directly below the welding jaws. It is important that the welded joint in the saw be no thicker than the rest of the saw. The thickness of the weld should be tested in the gaging slots on the grinding wheel guard before placing the saw on the wheels. The table on page 18 shows the proper gage slot to use for each width of saw blade.

The grinder and light are connected to the same switch to insure that the grinder will be shut off after use.

SETTING UP THE SAW GUIDES

To set up guides for any width of saw from 1/16" to 1", use the following procedure:

1. Remove both top and bottom guides from the machine.
2. Select the set of inserts that corresponds to the width of saw being used.
3. Place the left hand insert in the milled slots as shown in Fig. 20, and tighten the screw lightly so that the insert will slide in the slot, but will hold its position.
4. Use the table given on page 18 to select the proper gage for the width of saw being used.

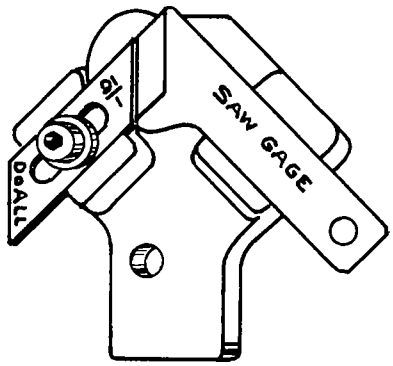

Figure 20

5. Insert the gage in the opposite slot and adjust the insert so that it meets the two gaging edges. Then tighten the insert securely in place.
6. Place the thickness gage edgewise between the two inserts, (Fig. 21). Then bring the right hand insert down so that it rests against the thickness gage. When the gage is removed, the gap left will be the proper thickness for the saw blade.

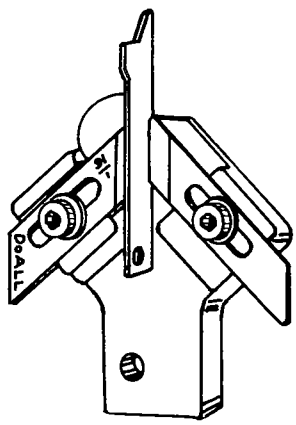

Figure 21

TRACKING AND TENSIONING THE BLADE

To facilitate "tracking" or fitting the blade onto the wheels of the saw, the upper saw wheel is tiltable in and out as well as adjustable up and down. (See Fig. 22). A handwheel at the center of the upper wheel allows close and accurate tilting of the wheel bands. The tension handwheel for adjusting the wheel up and down is located below the wheel.

This handwheel will allow a 7″ adjustment to the wheel on the 16-2 and 36-2, 3″ on the 26-2.

On models where both the upper and rear wheels are used, correct alignment of the wheels for proper tracking has been done at the factory. If the adjustment of this wheel is changed, it can be realigned by using a two-wheel saw length over the drive wheel and the upper wheel. Once this adjustment is made the upper wheel should be locked in position using the fluted lock nut. The blade can then be tracked by adjusting the angle of tilt of the rear saw wheel.

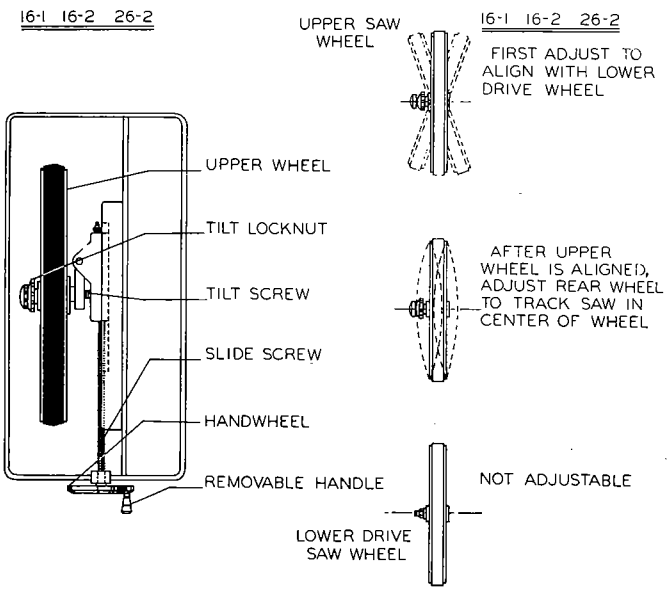

Figure 22

If the welded saw band has not already been run through the table and work for internal sawing, the filler plate in the table is removed and the band fitted through the slot. The band is then placed around the wheels and the slack taken up with the lower handwheel. The filler plate is replaced and the machine is then started.

The saw has been correctly "tracked" if it runs on the crown of the wheels and its back just touches the thrust bearings on the saw guides. If the blade starts turning the thrust wheels, or if there is a noticeable gap between the blade and the wheels, the tilting handwheel should be adjusted by turning it clockwise for inward tilting, counter-clockwise for outward tilting. If the teeth of the saw run so far in the saw guide slot that a clicking noise is heard, or if the saw does not run deep enough in the slot to be guided perfectly, an incorrect insert is being used for that particular width of blade.

Before starting to saw, the machine must be stopped and final tensioning must be made with the handwheel under the upper wheel. The band should be loosened and then tightened again so that the slack is taken up to the point where the handwheel just begins to turn hard. Another quarter turn of the handwheel should provide correct tension. This tension may be checked by vibrating the band between the wheels. A vibration that indicates tautness of the band without great strain on it will be correct. Blades 1/8″ or less will require less tension than wider ones. Experience with the machine will show when enough tension has been applied to permit the saw to do the work without twisting or wavering.

A new blade will stretch slightly after it has been used. In making a long cut with a new blade, it is important to watch the tension of the saw so that it does not become too slack.

SAWING

The **DoALL** is very simple to operate, but to make the saw follow to within a few thousandths of an inch from the line requires some experience. We recommend that the operator practice on sample blocks of steel before attempting to do actual work on the machine.

Hand feeding is best for small dies, templates and light work, and also on cutting all

small curves. Use the power feed for production work whenever possible. When heavy pieces are being sawed they should be placed on the table with care to prevent damage to the table surface.

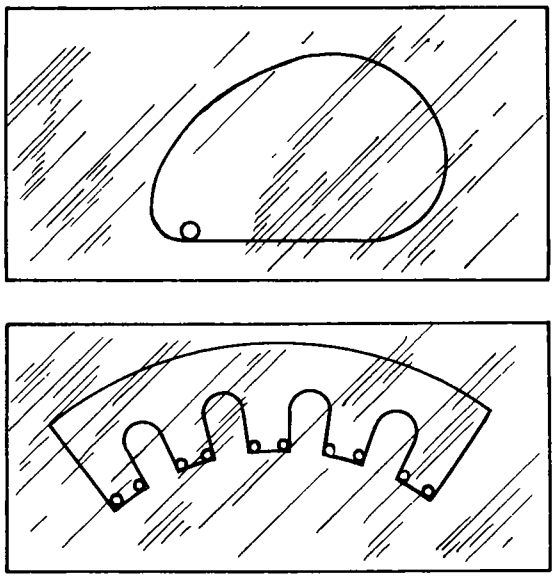

Figure 23

As a general rule a hole is drilled wherever there is a sharp corner to be cut. However, this is not absolutely necessary. A corner may be by-passed with a curve and the remainder notched out later.

Turns can be cut without drilling by notching a space with the saw. The blade is turned in the notched space and then a cut is made in the next direction.

The diameter of the drilled starting holes is determined by the size of the saw. The widest saw possible is used for the curve to be cut.

The upper post should be kept as close to the work as possible. If the post cannot be raised, the trouble may be corrected by re-tightening the two hex-nuts on the rack gear. If the post keeps dropping after its lock has

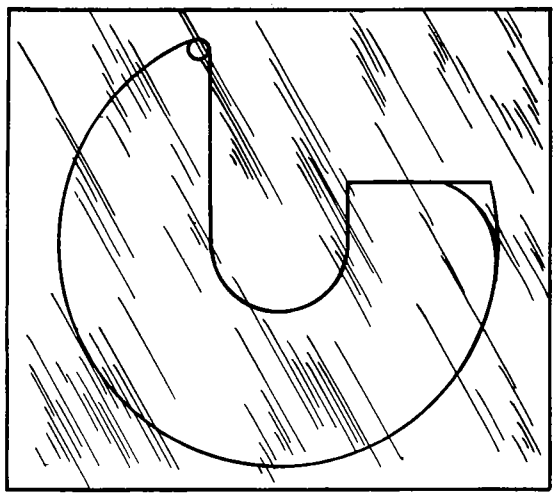

Figure 24

been released, the spring tension screw in the post block should be adjusted to the desired tension.

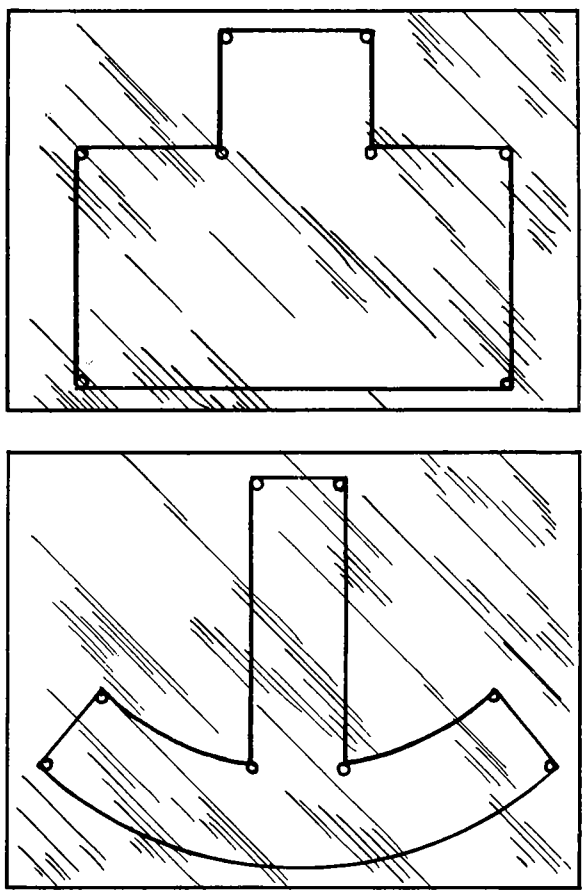

Figure 25

If the correct speed is maintained, the saw will cut swiftly and cleanly. The pressure exerted on the work depends on the condition of the saw, the stock thickness and the skill of the operator. The stock can be fed as fast as the saw will cut without putting undue pressure on the saw band and saw guides. Avoid attempting to cut too small a radius with too wide a saw. This will bind the saw causing the lower drive band to become grooved.

In cutting curves, pressure should be extended into the radii as shown below.

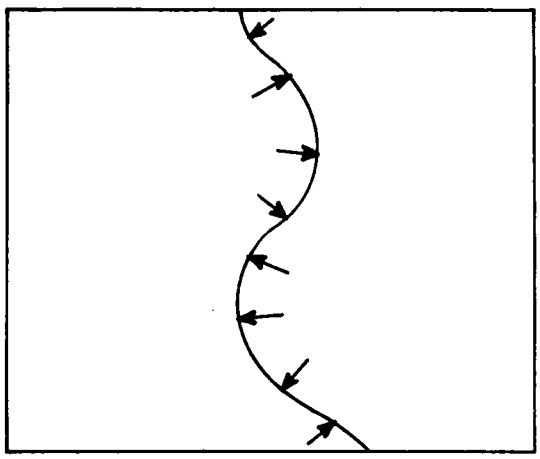

Figure 26

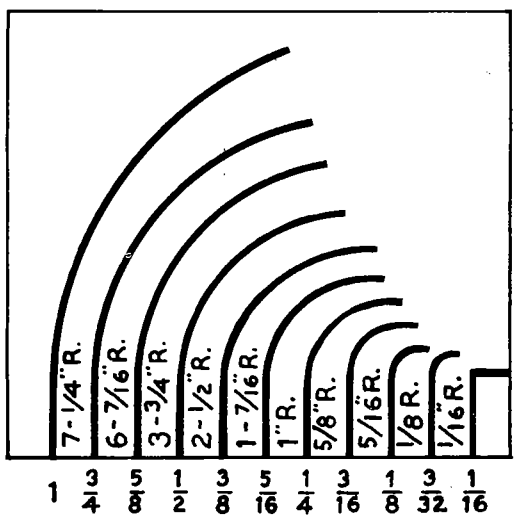

Figure 27

Minimum Radii Cut

FILING OPERATION

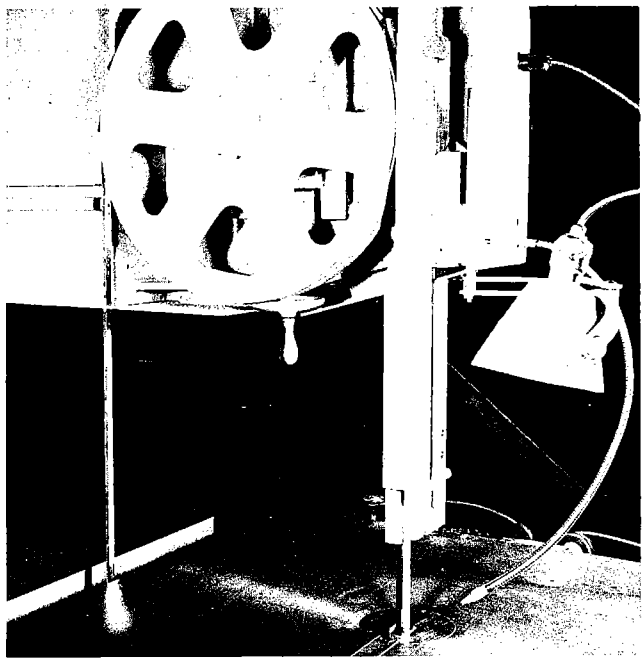

Figure 28

SELECTION OF THE FILE BAND

DoALL'S three-inch tool steel file segments are mounted on a special spring steel backing. One continuous backing is used on the 16-1 and 16-2 machines. The bands for models 36 and 26 are in two sections, each joined with the regular snap-lock joint. When a full throat clearance of 60″ is desired on the Model 60, three sections are used around the three band wheels. One of these sections can be removed to convert the file band for two-wheel use when a wide throat clearance is not needed.

On Models 36 and 60 the auxiliary guard shown in Figs. 2 and 4 is used for two wheel operation.

The Job Selector Dial will indicate the correct file bands to be used for the proper filing of common materials. For special work, the Band Tool Manual should be consulted.

The available sizes and types are as follows:

		Flat	Half Round	Oval
Short Angle	10 teeth	3/8"-1/2"	3/8"	3/8"-1/2"
Bastard	12 teeth	3/8"		
Bastard	14 teeth	1/2"		3/8"-1/2"
Bastard	16 teeth	3/8"	3/8"	
Bastard	20 teeth	3/8"-1/4"		
Bastard	24 teeth			1/4"

SETTING UP THE MACHINE FOR FILING

The following steps should be followed for both internal and external filing:

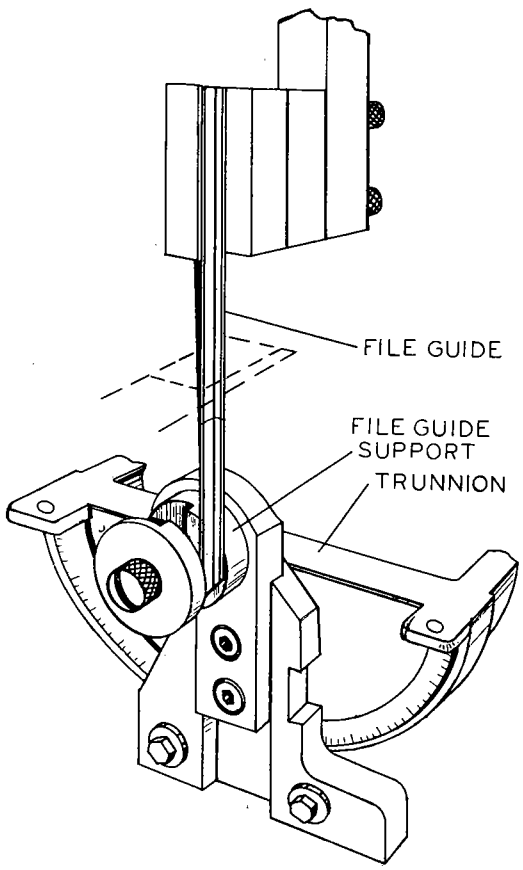

Figure 29

1. If the machine is already set up for sawing, remove the top and bottom saw guides from the upper and lower posts. Then remove the saw filler plate and remove the saw blade.

2. With the transmission shifted to neutral, mount the file guide support, as shown in Fig. 29 on the lower post block making sure the proper width of slot for the file band is being used.

3. Lower the upper post of the machine to the proper work thickness. This thickness should not exceed two inches when a 1/4" file band is being used. Longer guides are available that will permit filing of 7" thicknesses with the 1/4" band and 8" thicknesses with the 3/8" and 1/2" bands.

4. Mount the file guide, locking it firmly to the post with the knurled thumb screws. The file band should then be mounted.

JOINING THE FILE BAND

1. With one end of the file band in each hand, (the yellow painted end in the left hand) hold the file ends at right angles with the filing surface up.

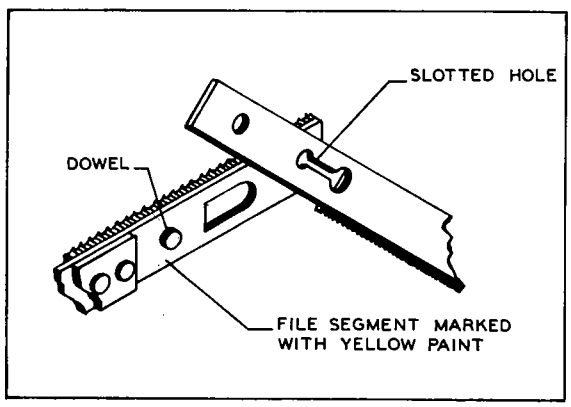

Figure 30

2. Depress the tip of the spring steel band held in the right hand with the lock rivet of the yellow segment held in the left hand.

3. Allow the rivet head to slip into the slotted hole. Slide the rivet head into the small end of the slot.

4. Straighten file band, allowing spring steel end to snap over the dowel.

5. Make sure the ends of the band are flush before running.

TRACKING AND TENSIONING THE FILE BAND

The file bands are properly aligned on the wheels in the same manner as used in tracking the saw bands.

The band can be made to run on the crown of the wheel by turning the handwheel located at the center of the upper wheel. A clockwise rotation of the tilting screw will make the band run to the inside. The file band should run freely in the file guide channel when properly tracked.

Tracking the file band on the 36 or 60-2 machine when set up for three wheel operation is accomplished by turning the handwheel at the center of the rear idler wheel.

Adjust the tension of the file band so that it is snug, by turning the tension handwheel until it just begins to resist turning. Too much tension on the file band will cause the file segment rivets to break when heavy filing pressure is applied. While at first it might seem that with excess tightening of the file band better filing results are obtained, this is not the case. Most accurate filing can be obtained only with the band at a light tension.

Check the file band to see that it is in alignment and passing freely over the channel in the file guide. This can be accomplished by hand movement of the upper wheel. Then start up the motor and shift the machine into low gear, so that the band will run slowly while it is properly tracked on the wheels. Then insert the file filler plate in the table slot.

FILING

Work pressure on the file band should not be excessive. Light pressure on all filing gives a better finish and files just as quickly. Heavy pressure may cause the file band to break or stall, resulting in a grooved lower wheel tire. It may also prevent the file from cutting because its tooth gullets will clog.

The correct combination of speed and pressure will produce curled chips. The best filing speeds are between 50 and 100 feet per minute. Use the Job Selector Dial for complete information on filing speeds.

Keep the files clean. Do not file when the teeth are clogged. Loaded files cause bumpy filing and scratch the work. Excessive filing pressures, when the file segments are clogged with chips, will cause the file teeth to strip out, damaging the band. Use a file card to clean the band before returning any file band to the storage cabinet.

To facilitate this carding, start the motor and set the **DoALL** running at its slowest speed. Then shift the machine into neutral position to release the transmission so that the file band can be easily hand moved in locating clogged spots.

REMOVING AND UNJOINING FILE BAND

To remove the file band from the machine, remove the filler plate from the table, release

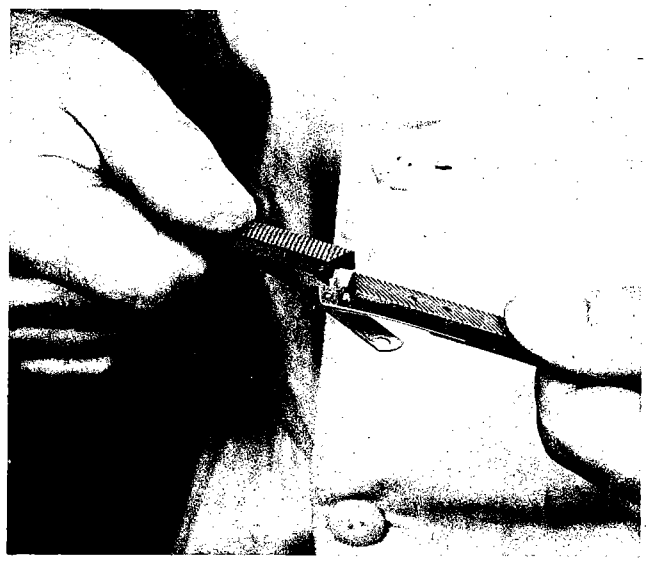

Figure 31

the tension on the file band by lowering the upper wheel, and slip it off the wheels. It can be stored in a coil; but do not coil it into more than three loops. By far the best means of storing file bands is in the **DoALL** Supply Cabinet. Here the bands are looped over in a 16″ radius and the ends hang in a compartment. Thus, they are kept clean and are not likely to be kinked. Another satisfactory means for storing the bands is to suspend them vertically from a pin which fits through the tail gate rivet hole.

To unjoin the band after it has been removed from the **DoALL,** the following procedure should be followed:

1. Hold band at joint with both hands, the yellow segment being held with the left hand.

2. Bend the joint to not more than a 12-inch radius, exposing the joint slot.

3. Using the forefinger of the left hand, depress the front end of the yellow file band with the thumb and forefinger of the right hand, disengaging the dowel.

4. Slide the lock rivet to the open end of the slot and lift off.

Do not bend the band more than necessary. This band is made of the finest special spring steel obtainable, but it is possible to put a kink in it if not properly cared for. Extra file segment rivets for repairs are in a bag attached to the file band.

BAND POLISHING AND GRINDING

This simple unit permits excellent polishing and finishing of parts previously sawed and filed and is a quick means of removing burrs. It makes your **DoALL** machine a three-in-one machine tool. This unit is set up in the same way the file band is set up.

Mount the polishing band guide support in the keeper block as shown in Fig. 32. Then lower the post to the four-inch thickness capacity mark and mount the band polishing guide on the post. It would be well at this point to rub graphite powder into the guide fabric to lubricate and increase the life of the polishing bands.

The polishing band is then mounted and tracked on the wheels in the same manner as the file bands. The tension should be snug with the polishing band traveling at 1500 F.P.M.

Emery cloth bands are available in the following sizes and grits:

Application	Cutting Speeds	Grit
Grinding	375-700	50
Polishing Coarse	500-1000	80
Polishing Fine	800-1500	150

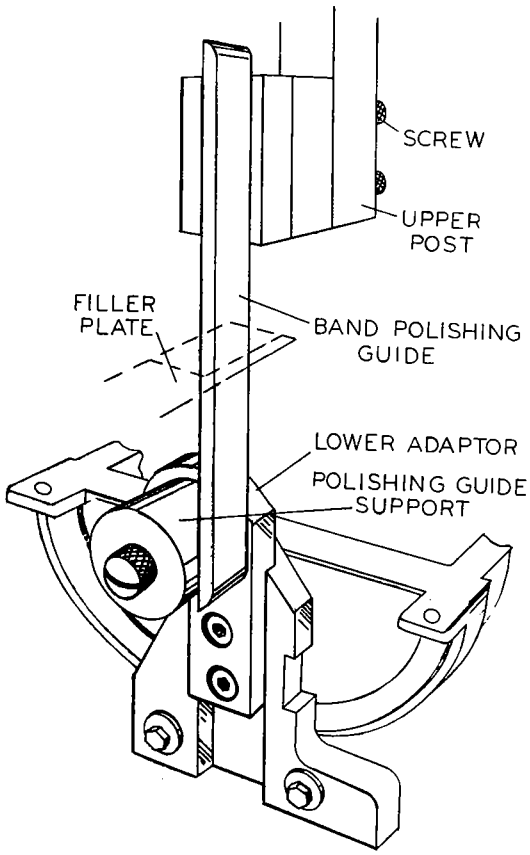

Figure 32

MAINTENANCE

Points of Wear to be Checked Monthly

Wheel Tires — When the tires are completely worn out, it is necessary to replace them by removing the tire with a screw driver or other flat tool and stretching the band until it can be taken off. These tires are held on by rubber cement but are easily removed and replaced.

Lower Wheel Brush — When the bristles of the brush no longer remove chips from the wheel tire, the brush should be reversed. When the brush is worn in both directions, it must be replaced.

V-Belts on Drive Mechanism — These belts will stretch slightly after use. The stretch of both belts is automatically taken up by the hinged motor mounting. Belt tension can be regulated by adjusting the nut on the motor base equalizer spring. Do not run the belts too tight.

Variable Pulley Assembly — The pulleys and sleeves should be checked for grooving.

Saw guide back-up bearings — The roller bearing caps must be replaced before they wear through to the bearing.

Saw guide inserts — The inserts are extremely hard and will last a long time before grinding becomes necessary. Care should be taken to avoid dropping them. They have been made extremely hard for long wear and as a result are extremely brittle. When the insert is worn so that the saw slot is not parallel it should be reground to a true 45 degree angle. Do not grind the flat or notched surfaces. They are accurately determined at the factory and are not subject to wear. Stone the point of the saw guide inserts after grinding so that there is a slight curve on the point and point edge.

Filler Plates — If the slot made by the saw blade in the end of the filler plate has become enlarged through twisting of the blade, the filler plate should be replaced.

Blade Shear — If the knife blades are dull they should be resharpened by grinding them on a surface or bench grinder. They may be disassembled by removing the snap rings on the pivot pin and eccentric disc, and then removing the retaining screws on the bottom blades.

Drive Motor — The drive motor is spring tension counter-balanced on its mounting hinge. Insufficient counter-balance will cause unnecessary wear on the speedmaster sheaves, bearings and shaft.

Too much counter-balance will cause the motor to "climb the belts" or "hop" excessively. Adjust the tension of the motor so that the mounting base just touches the base of the machine when allowed to drop from a height of one inch.

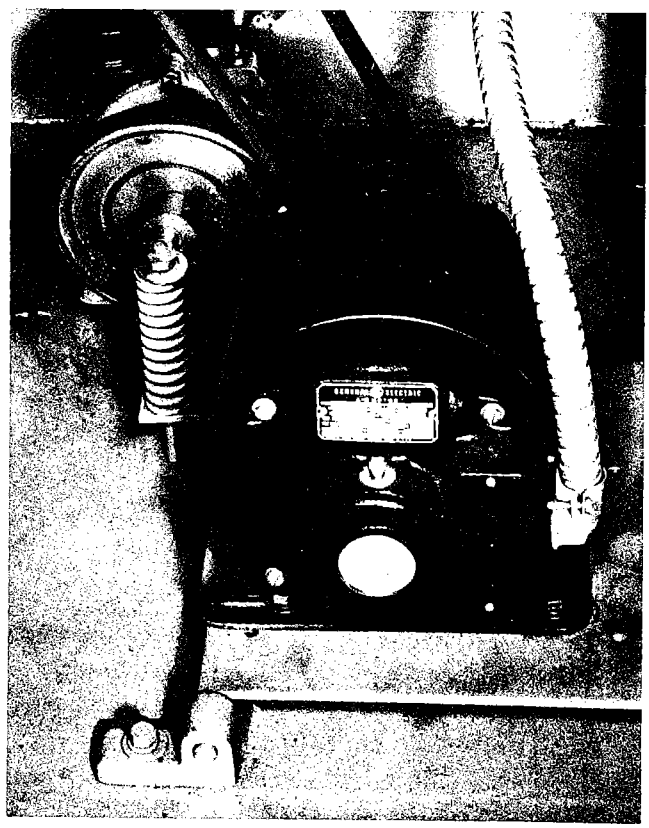

Figure 33

Butt Welder (For Saws 1/16″ to ¾″ Wide)

The moving welder jaw has been set to allow a movement of .052″. The length of this movement cannot be changed. If too much flash is formed in welding 1/16″ to ⅛″ bands, place saws in the jaws as usual but leave a scant 1/64″ gap between the ends of the band. Make sure ends are in alignment. If they are not, bend the band up or down slightly in the stationary jaw to bring it in line with the other end. A scant gap cuts down the travel of the movable jaw.

The most important adjustment of the welding unit is the adjustment of the length of time the current flows through the jaws. Two failures in welding will indicate when this adjustment is needed:

1. If the jaws move when the stationary jaw clamp is released, the circuit has been broken before the jaw has moved its full .052″.

2. If a weld "burns out", the circuit has not been broken when the jaws have completed their full .052″ travel.

These two failures can be corrected by adjustment of the cutoff switch shown in Fig. 34 which controls the length of time the current flows through the jaws.

This switch is a leaf switch which is opened and closed by a slide rod connected to the movable welder jaw. When the welding switch lever is depressed, the jaw closes, pushing the slide rod over until the leaves of the cut-off switch have been opened.

An opening in the outside leaf of the cut-off switch permits insertion of an Allen-type wrench into the end-knob of the slide rod. This knob screws in and out to permit careful adjustment of the timing. A quarter turn of the knob will cause a movement of .008″ in or out. Each click of the ratchet is equivalent to .002″ movement. A clockwise rotation of this knob will produce a slower breaking of the welder circuit. This will produce more heat at the point of the weld and correct for jaw movement after the weld has been made. A counter-clockwise adjustment of the end-knob will give less heat to prevent "burning out."

The procedure for adjusting the timing is as follows:

1. Disconnect electric power.

2. Remove the welder from the column by removing the four panel screws, grasping the lamp shade as a handle and pulling the panel forward until it is at approximately a 45 degree angle. The angle strip at the bottom of the panel acts as a hinge, and a stop holds the welder assembly from tilting more than 45 degrees outward. The back of the panel shown in Fig. 34 will then be accessable.

3. Depress the welding lever and check the cut-off switch. Using the Allen wrench in the opening between the contact points on the cut-off knob, adjust the gap until it is between 1/32″ and 3/64″. This adjustment can be checked by moving the jaws from their standard 220 volt setting of .201″ to .167 inches. At .167 inches the contact points should just begin to open.

4. Turn the electric power on and make a sample weld, using a ½″ saw. If the weld appears to be thick toward the teeth and tapering toward the back of the saw, the welder is operating correctly.

5. If the welds still tend to burn out, two other points should be checked for:

(a) The slide rod may be sticking. Check to see that the movable jaw has a free movement of .052″. A drop of oil on the slide rod worked along by repeated depressing of the lever may correct this trouble. If it does not, the slide rod should be removed and cleaned. Before removing the slide rod, clamp a strap

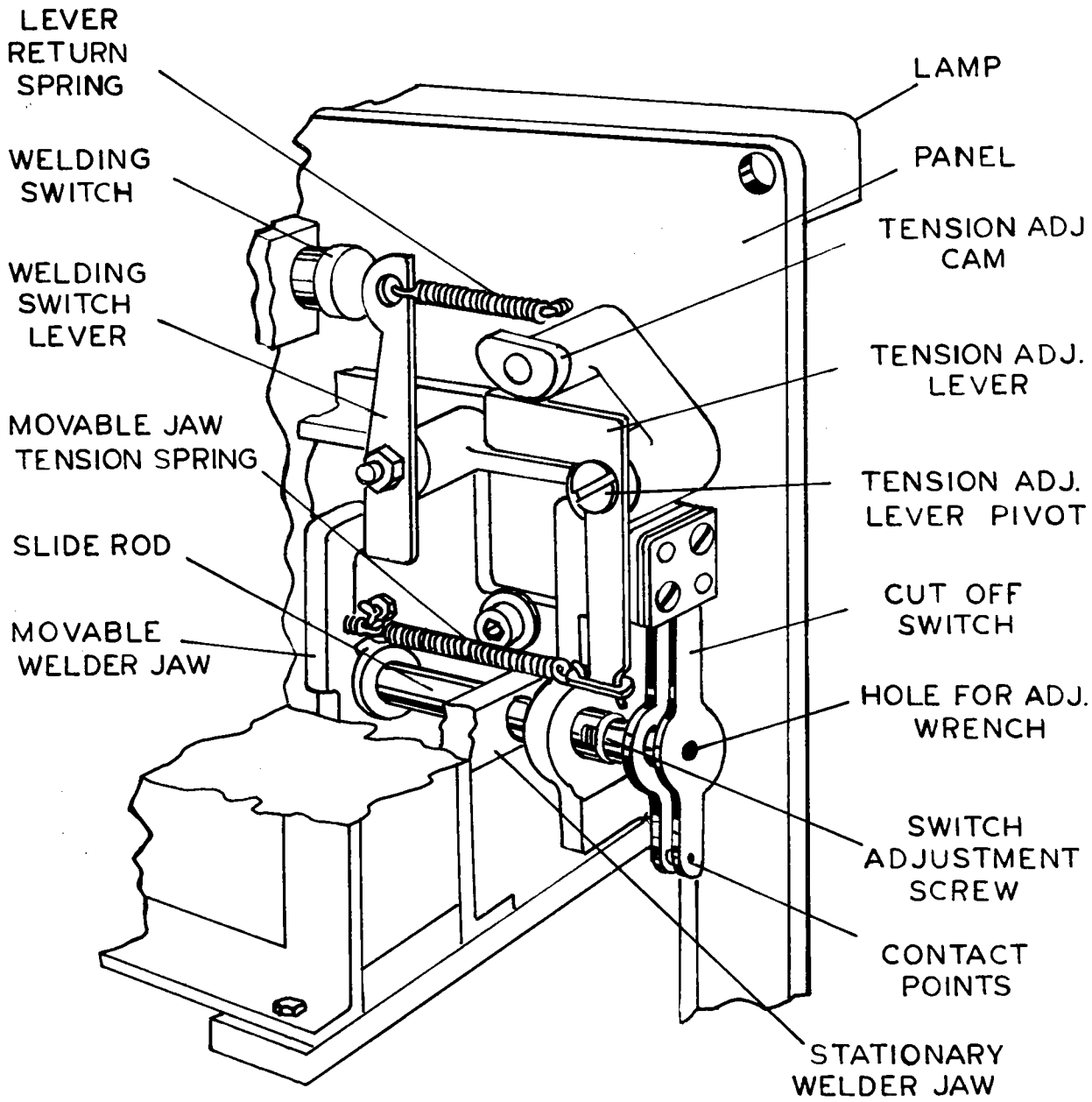
LEVER RETURN SPRING
WELDING SWITCH
WELDING SWITCH LEVER
MOVABLE JAW TENSION SPRING
SLIDE ROD
MOVABLE WELDER JAW
LAMP
PANEL
TENSION ADJ CAM
TENSION ADJ. LEVER
TENSION ADJ. LEVER PIVOT
CUT OFF SWITCH
HOLE FOR ADJ. WRENCH
SWITCH ADJUSTMENT SCREW
CONTACT POINTS
STATIONARY WELDER JAW

Figure 34

of metal about 1/8" x 3/4" securely between the welder jaws to maintain the .201 spacing between the jaws.

(b) The web strap which conducts electricity to the movable jaw may have become kinked, causing it to pull against movement of the jaw. This strap should be checked for free movement when the jaw is moved.

To secure consistent results, the welder jaws and clamps must be kept clean. During the welding cycle excess metal in the form of incandescent particles is blown out of the weld, causing a scale or flash to build up on the welder jaws and clamps. The welder will not weld properly unless the jaws and clamps are wiped clean after every weld.

Misalignment of the weld is usually caused by worn or dirty jaws. However, if the welder jaw inserts and clamps are clean and not worn and the welds are out of line, the jaws are not aligned properly. This misalignment can be determined by inspection of the weld after the flash has been removed. After determining which jaw is not in alignment, the jaws can be adjusted as desired. The movable jaw can be moved up or down in a vertical arc by adjusting the Allen-type set-screws in the rear of the jaw. These set-screws also position button bearings in back of the movable jaw, so that if the position of the jaw is moved, care must be taken that the bearings are not set up too tight. If the position of the stationary jaw is changed, make certain that the gap between the jaws is .201" in the open position.

Never file the silver contact points. The silver oxide which forms when the points burn is an excellent conductor.

When the grinding wheel has become badly grooved from squaring of saw ends, it should be removed and reversed; full use of the wheel can be made before replacement.

LUBRICATION

The DoALL is completely equipped with sealed ball bearings which are lubricated at the factory and will require no further lubrication except for the parts listed below:

1. The "Speedmaster" variable speed pulley which is mounted in the base should be lubricated at least once a week using a good grade of S.A.E. No. 10 motor oil. Do not over-oil the variable speed pulley because the excess will coat the belts causing slippage.

2. If the drive motor has sleeve type bearings it should be oiled at least once a month using SAE 20 oil. If it has ball bearings it should be cleaned and repacked with a good grade of bearing grease at least once a year.

3. The grinder motor located on the butt welder panel and the hydraulic pump motor for hydraulic power feed machines, located under the rear cover of the machines, should be oiled every 30 to 60 days using 6 to 10 drops of SAE 20 oil.

4. The gear reduction transmission should be oiled monthly, using a good grade of SAE No. 20 transmission oil, filling the case so the oil will just appear in filler pipe elbow.

5. Upper wheel slides should be greased once a month using a No. 2 high-pressure grease.

6. The following parts should be oiled once a month with two or three drops of SAE 20 oil.

(a) Tension screw and thrust bearings
(b) Wheel tilt screw and hinge shaft
(c) Shift lock mechanism
(d) Speed change screw, nut, swivel and handwheel shaft
(e) Power feed hinge shaft and feed screw (if supplied)
(f) Power feed foot pedal hinge point

(g) Hinge points in motor mount

7. Occasionally lubricate the post to prevent rust and protect the fit into the post block. Do not oil the rotary air pump. Use powdered graphite very sparingly. This graphite is forced into the pump through the air inlet while the pump is in motion. Oiling the pump will cause the vanes to stick in their slots and since the vanes are made of plastic, the oil tends to destroy them.

Belts should be kept clean and free of oils to insure long life and to prevent slippage.

Check the manufacturer's specification sheet included in the literature envelope for complete maintenance of the motors supplied with the machine.

LUBRICATION CHART

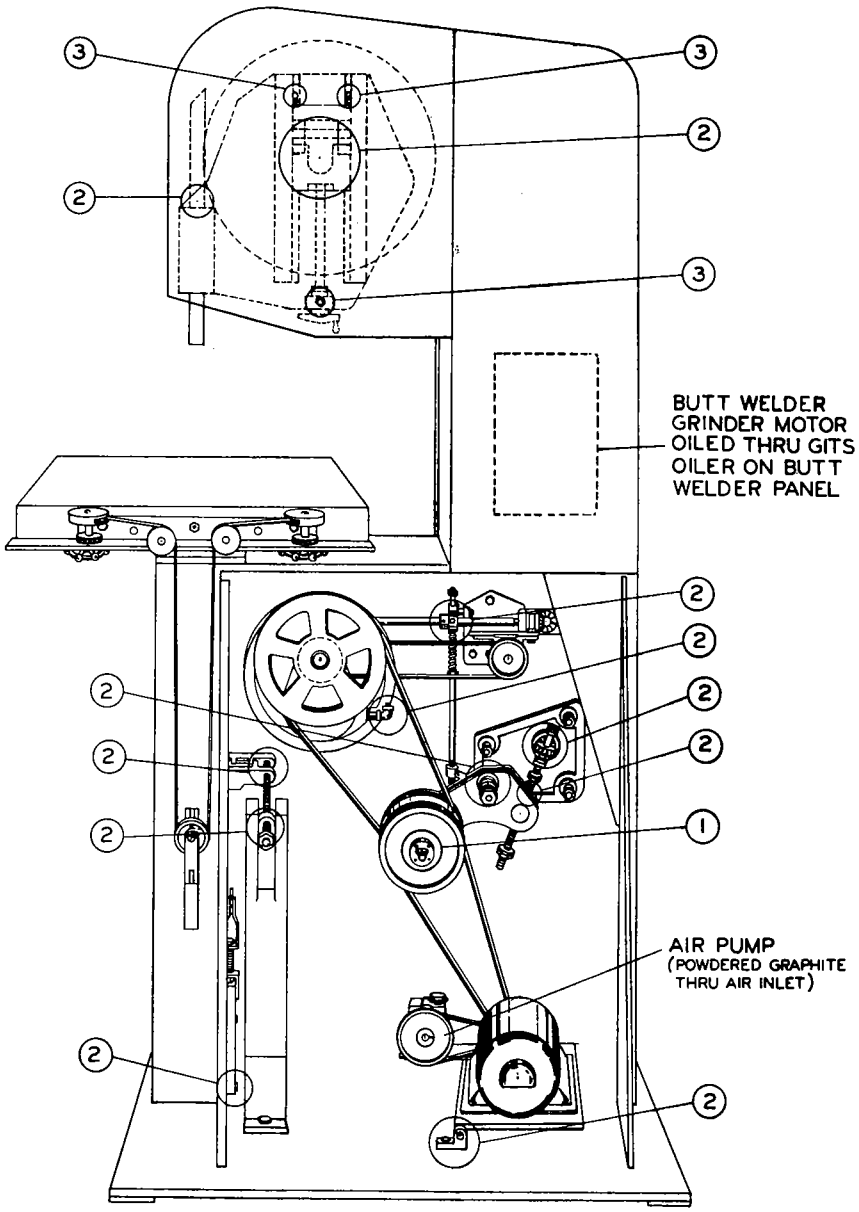

(1) USE S.A.E. NO. 10 MOTOR OIL (2) USE MACHINE OIL NO. 20 S.A.E. (3) USE NO. 2 HIGH-PRESSURE GREASE

Figure 35

ATTACHMENTS

HYDRAULIC CONTROLLED CONTOUR FEED

Hydraulic controlled contour feed is optional on Models 16-2, 36-2 and 26-2. It provides power feeding for all types of contour sawing, and is controlled by a handwheel and control valve on the table.

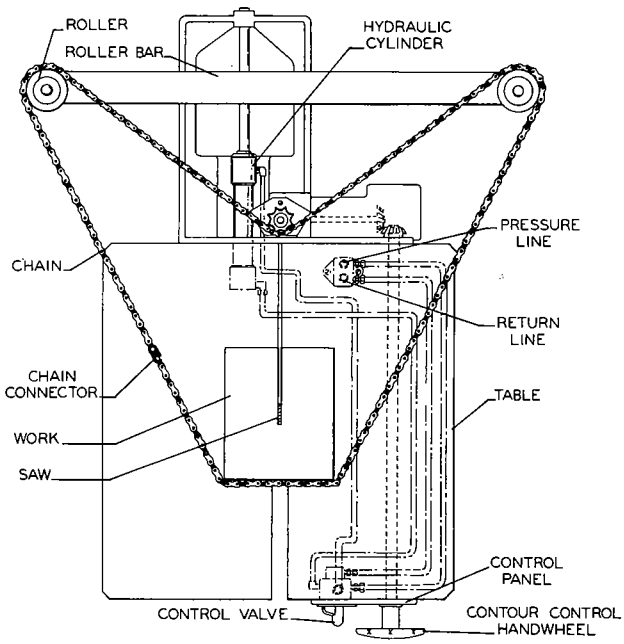

Figure 36

As shown in Fig. 36, the power feed guide roller bar is drawn by a hydraulic piston. The valve which controls the hydraulic pressure varies the rate of feed from 0 to 15 feet per minute. When the pointer of the valve handle shown in Fig. 37 is turned to the right, the feed increases until a maximum speed of 15 feet per minute is reached. The hydraulic system reverses when the control valve handle is turned to the return position. The handle should always be in the "stop" position when the hydraulic system is not in operation. This allows the oil to by-pass through the valve and decreases the load on the motor.

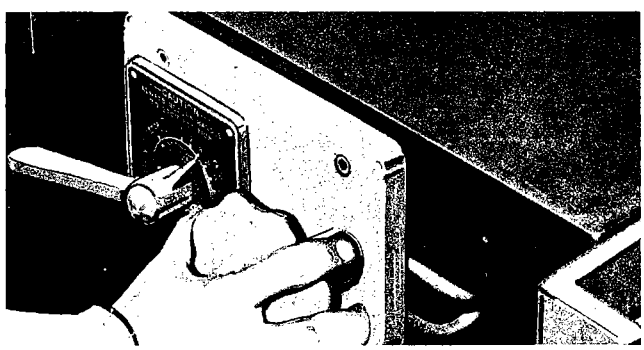

Figure 37

SET UP AND OPERATION

The mechanism is mounted on the table when shipped. After the table is placed in position on its trunnion and the trunnion nut is locked, the flexible hose lines should be connected to the frame manifold located on the frame of the machine below the table. The hydraulic tank should then be filled with 2½ gallons of SAE 10 oil of best quality.

Put the control valve in the "stop" position and start the hydraulic pump motor. Be sure the motor is running so that the rotation is in the same direction shown by the arrow on the motor. This may be changed by reversing the leads to the machine.

Move the guide roller bar connected to the piston rod back and forth by turning the control valve handle from the feed position to the return position until the system is completely filled with oil and free of air pockets. The hydraulic system is then ready for operation.

With the control valve handle in the "stop" position, place the chain around the sprocket of the work holding jaw and around the two horizontal rollers at the ends of the guide roller bar. With the guide roller bar in the reverse position, take up all the slack in the chain and connect the ends together, using the quick-lock provided. The power feed is then ready for operation.

The control handwheel at the front of the table drives the chain sprocket which turns

the work being cut. If a curve is too sharp for the saw to cut at the speed used for straight cutting, reduce the feed intermittently while the curve is being cut. Do not feed the work into the saw so rapidly that it causes the saw to twist or bow.

For cutting heavy work, use the work holding clamps described on page 37.

When cutting into an opening, reduce the speed with the control valve to prevent damage to the saw and work being cut.

For straight cut-off work where no curves are to be cut, set up the horizontal pulley, sprocket and chain as shown in Fig. 36.

MAINTENANCE

1. Always be sure there is enough oil in the tank. Check the oil with the dip stick provided on the tank as shown in Fig. 38. When changing oil use 2½ gallons of high quality SAE-10 oil.

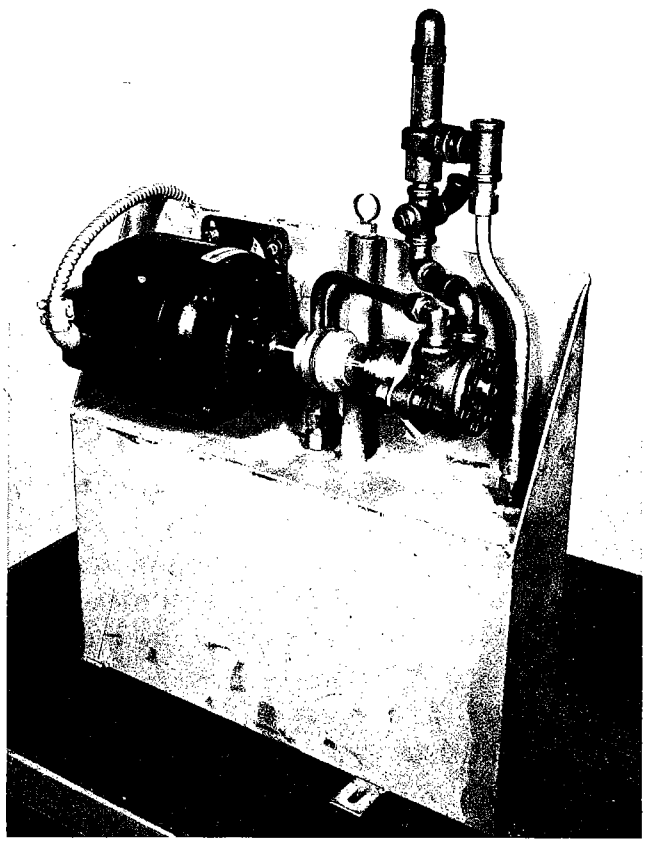

Figure 38

2. Clean the tank and oil filter every six months. The oil filter is located inside of the tank and may be serviced by removing the cover plate at the front end of the tank.

3. If the hydraulic pressure drops, dirt may be lodged in the piston-type relief valve or the relief valve spring may have to be replaced. The relief valve is set at 100 pounds pressure when it leaves the factory. In special cases it may be necessary to set it up to 200 pounds pressure. To increase the pressure remove the cap on the top of the relief valve and turn the adjustment screw clockwise. Check the pressure with a pressure gage at the point designated. If the pressure is high enough and the pulling power is still insufficient, the piston cups may have to be replaced since the oil pressure goes by the piston cups into the exhaust end of the cylinder.

4. If the control valve does not operate properly there may be dirt between the disc and the face of the valve. If so, the valve should be taken apart and the faces cleaned or lapped if necessary.

5. Bumpy or uneven feed is caused by air in the cylinder. This air may be removed by running the piston rod back and forth the full length of the cylinder a number of times. This condition usually occurs when a new machine is installed and started for the first time, or when the system has been drained, cleaned, and refilled with oil.

HYDRAULIC AUXILIARY WORK TABLE

This table is used for straight cutting of heavy material on Models 36, 26-2 and 60-2. It has a maximum stroke of 15″, and a feeding speed of from 0 to 15 feet per minute. It

is connected to the hydraulic system by removing the two ¼″ pipe plugs in the service manifold and connecting the exhaust and pressure lines from the hydraulic table feed cylinder. The movement of this table is controlled and operated the same as the hydraulic power feed as explained on pages 35 and 36.

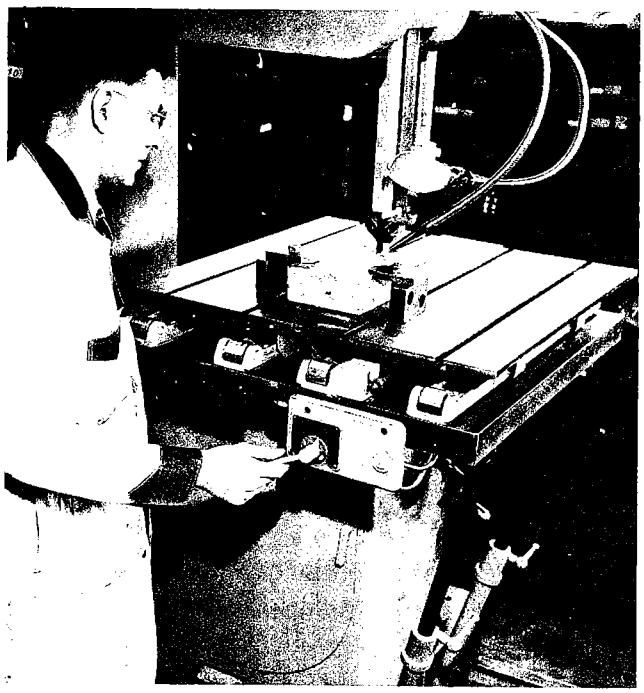

Figure 39

MISCELLANEOUS ATTACHMENTS

HEAVY WORK SLIDE

The function of the Heavy Work Slide is to permit easy movement of heavy parts that would otherwise be difficult to feed into the saw. The bars are ball bearing equipped and have a separate center support to support the material at the point of cutting.

Insert the center support in the table slot ahead of the filler plate. The center support should then be sawed so that a path or kerf is made for the saw to travel in. This will allow a solid contact between the work and feed table surface at the sawing point.

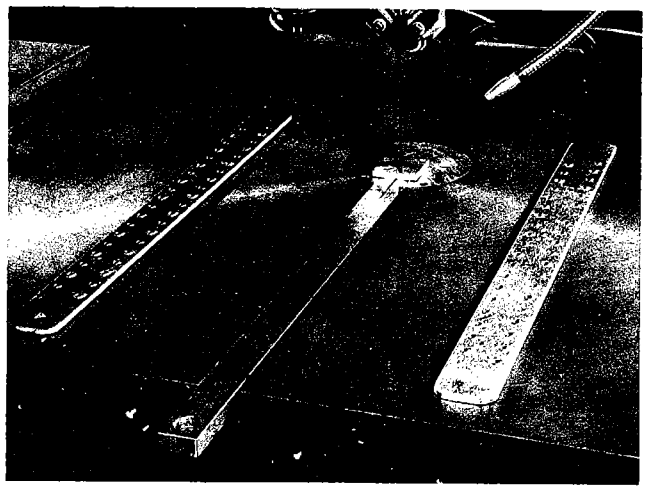

Figure 40

HEAVY WORK CLAMPS

The Heavy Work Clamps (Fig. 41) are used in the contour sawing of particularly heavy material as well as stacked parts to produce multiple parts in one operation. These clamps have a ball bearing base and have a standard clamping capacity of four inches.

As in the case of the heavy work slide, there is a center support provided which should be inserted ahead of the filler plate and sawed to leave a path or kerf for the saw

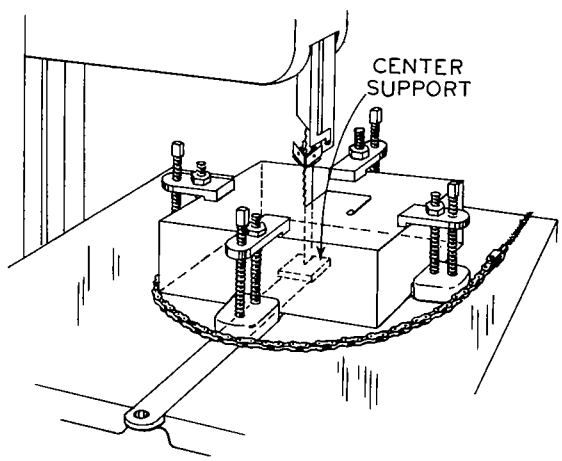

Figure 41

to travel in. It is important that this center support be used when cutting stacked parts since it will prevent the bottom pieces from bending downward or vibrating which will cause excessive wear on the saw set. Clamp the four work-holding clamps on the material and square the work with the saw through the use of the table tilting device.

Each clamp is provided with gripping teeth so that the power feed can be applied in moving the material into the saw.

RIP FENCE

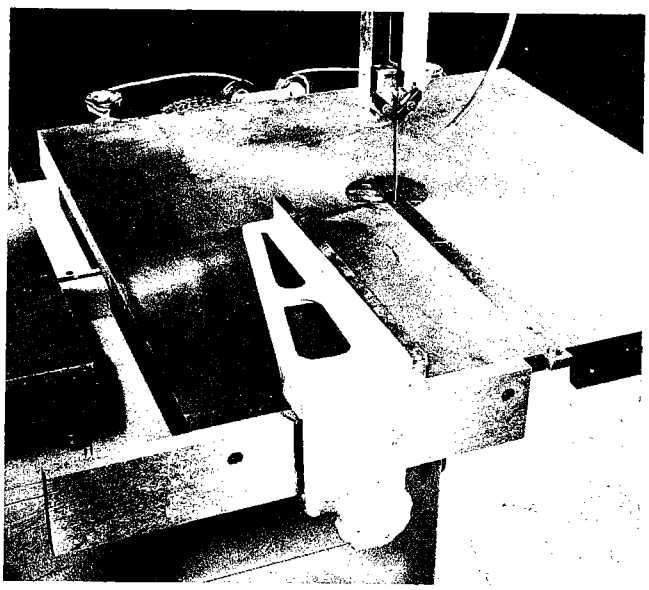

Figure 42

Set up this attachment as shown on the accompanying illustration and square the fence so that it is in line with the table slot. Also make sure that the machine is in proper alignment as given under "INSTALLATION."

In making a long cut be sure that the saw used is not worn on one side. This will cause the work to wander away from the rip fence guide.

BEVEL RIP FENCE

The bevel rip-fence attachment shown in Fig. 43 can be quickly mounted on the right side of the saw blade by mounting it in the two holes drilled and reamed in the right side of the table. This attachment is used for bevel or straight line ripping of all types of materials.

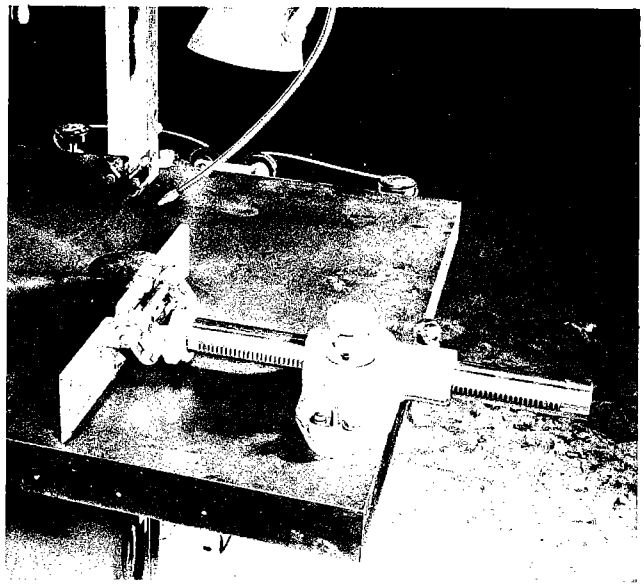

Figure 43

The rip fence bar can be tilted vertically in either direction to correspond with the tilting of the work table.

When first setting up the attachment, line the rip fence bar so that it is parallel with the saw blade. This is done by adjusting the aligning plate on one leg of the rip fence support.

CUT-OFF AND MITERING ATTACHMENT

Set up this attachment as shown in Fig. 44 making sure that the mitering bar is in even contact with the table surface. Use a combination square in the table slot as a basis for alignment and setting the mitering bar at various angles. When not in use, swing the attachment on the slide rod so that it hangs below the table.

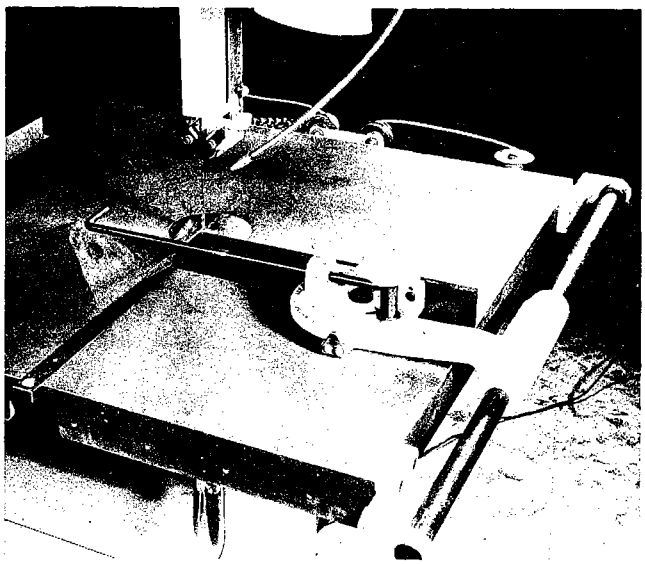

Figure 44

The bolt at the top of the attachment is used when a power feed is to be applied. The gage rod directly below the above bolt is used as a measuring cut-off guide.

MITER ATTACHMENT
(Filler Plate Mounting)

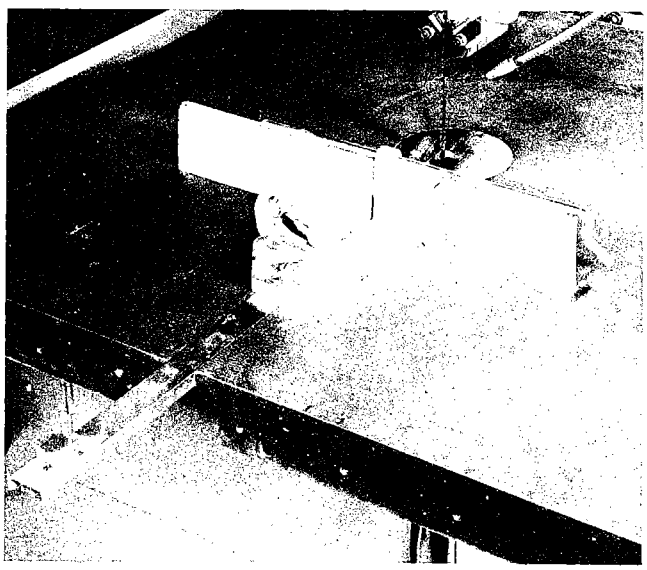

Figure 45

This attachment is especially adapted for production cut-off and angle cut-off operations.

To set up, install the proper saw blade and guide, remove the filler plate from the table, and slide the miter attachment in its place. Set the stop on the table slide bar in a proper position that will prevent saw blade from sawing into the miter head. The miter head may be adjusted for angle cutting by releasing the clamp stud and turning. The protractor plate is calibrated to 45 degrees for ease of adjusting. Gage rod may be adjusted to control length of cut by loosening thumb screw and sliding the rod to its correct position.

"ALL PURPOSE" MITERING ATTACHMENT

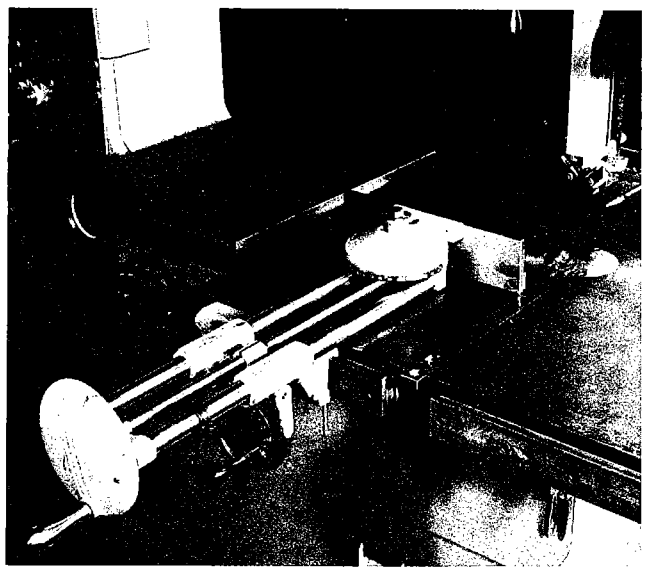

Figure 46

Three operations are performed on this single unit. It may be attached to the automatic or hydraulic power feed of the machine for automatic ripping, cutting off and mitering operations. Rods, tubes, bars, channels, rails and irregular shapes can be notched, squared, ripped or mitered with accuracy.

This attachment is mounted on the front or sawing side of the table. First mount the table guide and guide spacer, then slide the

attachment along this table guide squaring up the miter bar with the table slot and check the graduation plate for a "zero marking." Use an open end wrench on the set screw when locking the attachment in the position desired. The attachment has an adjustable work stop on the mitering bar and a lock screw on the miter head so that the attachment can be set for any angle cutting.

To prevent binding mitering rods when using power feed, remove mitering head and adjust bearing under mitering head.

For manual operation, the attachment is operated by use of the handwheel at the front of the unit.

When changing from manual to automatic feeding, disengage the feed screw by use of the split nut lever at the right side of the unit. Fasten the power feed chain around the collar at the top of the miter head. Then operate as previously outlined for power or hydraulic feeding.

SPIRAL SAW GUIDES

The spiral saw guides are used for the contour sawing of thin sheets of steel, plastics and woods. They minimize the necessity of a large throat thickness capacity machine. With the spiral saw guides, the work can be pushed into the blade from any direction. These guides are set up and mounted to the post and keeper block in the same way as the insert type saw guides. The same mounting screws are used.

ANGLE SAW GUIDES

The 30° Angle Saw Guides are mounted in the same way as the standard insert guides. The blade is twisted however, to permit cutting off lengths of material greater than the throat capacity of the machine. Operate at speeds under 1500 F.P.M.

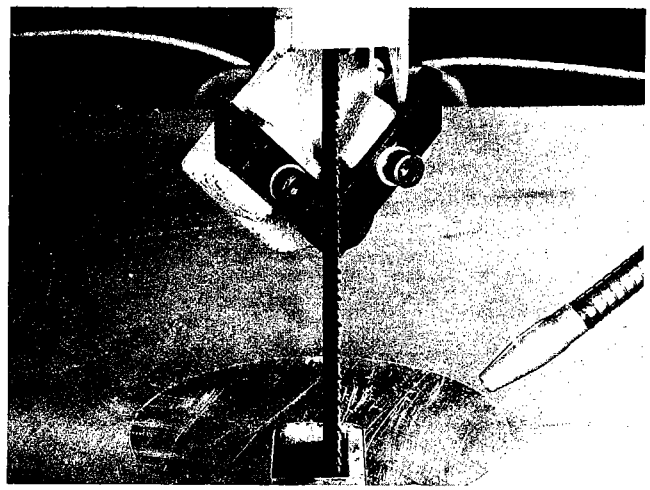

Figure 47

FILE ADAPTER PLATE

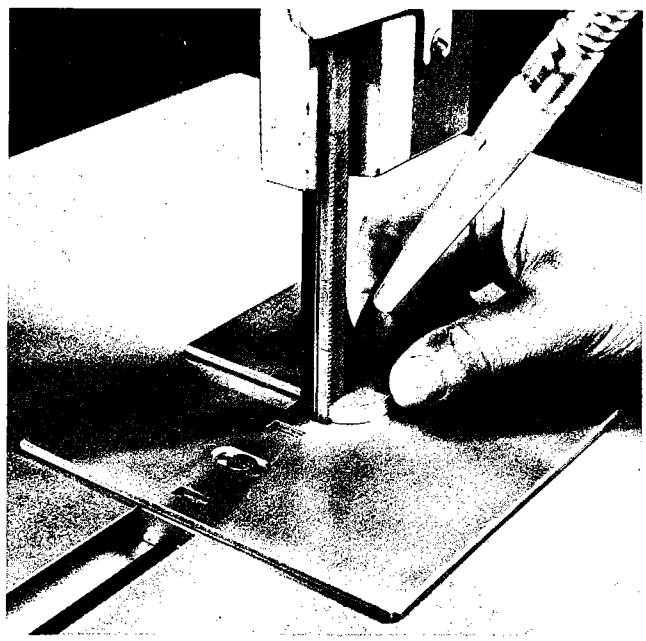

Figure 48

By using this file adapter plate, accurate filing of small work is possible. It also acts as a safety device, since it prevents jamming of the work between the table slot and the face of the file band.

Remove the table filler plate and place the file adapter plate around the file band as shown in Fig. 48. Insert one filler plate hand-

wheel in the under side of the file adapter plate. Loosen the flat head screw in the top plate and adjust to within 1/16″ of the cutting surface of the file band. Tighten the flat head screw and lock the plate in place by tightening the filler plate handwheel.

DISC CUTTING ATTACHMENT

The Disc Cutting Attachment permits the cutting of true circles, either internal or external, of any diameter from 2½″ to 30″, depending on the table size of the machine.

Bolt the attachment to the post using the two socket-head cap screws and washers furnished. Place the flat washers against the post to prevent damage. Lower the post until the saw guides are approximately ⅜″ above the table. Loosen the two bolts holding the radius arm clamp and adjustment housing, and slide the unit along the radius arm to approximately the distance of radius to be cut. Clamp the adjustment housing tight.

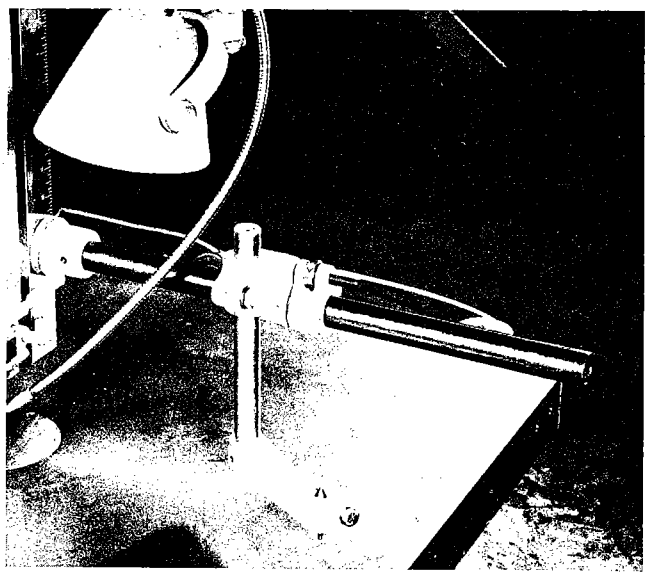

Figure 49

The center of the centering pin must be directly in line with the cutting edge of the saw blade. To accomplish this, remove the filler plate from the table and place a square against the side of the filler plate slot with the blade of the square against the tip of the saw tooth. Line up the centering pin with the edge of the square's blade and clamp tight. Make final radius adjustments with the fine adjustment wheel. Tighten bolt on radius arm clamp making sure center pin is square to table. Adjust unit for work thickness by raising or lowering post.

The machine alignment as given in the section under "INSTALLATION", should be checked to insure extreme accuracy with the disc cutting attachment.

MAGNIFYING ATTACHMENT

This attachment consists of a 3″ rectangular lens mounted in a flanged housing. The housing contains a light socket for a 15-watt candelabra type lamp. The lens and light are supported on a swivel-joint arm secured to the post by means of a "C" type clamp. The glass can be adjusted to any position for both sawing and filing. A special plug connector on the extension cord connects with the outlet located on the front of the machine, above

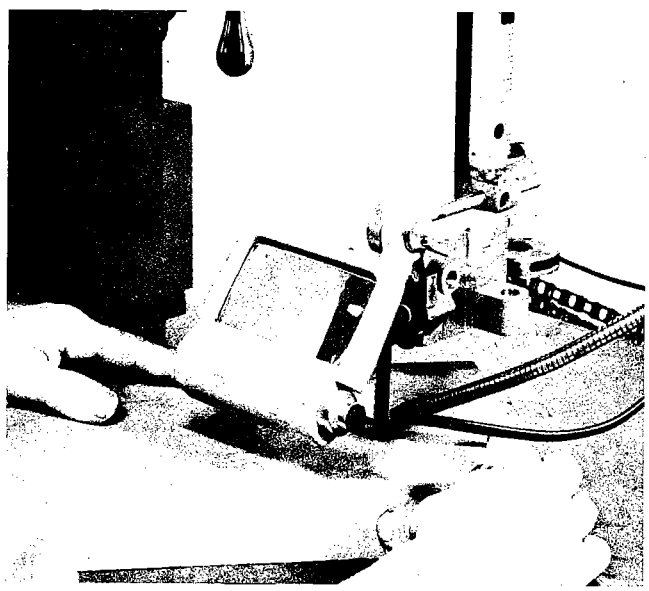

Figure 50

the table light outlet. The lamp has no switch and is "on" when plugged into the outlet. This outlet should not be used for any other light extension where more than 15 watts will be consumed.

DoALL SAW EEZ

As a substitute for the **DoALL** saw lubricator, we recommend **DoALL** Saw EEZ which has been specially prepared for contour sawing. This Saw EEZ comes in four ounce tubes. It is applied directly to both sides of the saw band while it is in motion. Apply only enough Saw EEZ to maintain a protective film on the saw. This will require a new application after four or five inches of contour cutting. This Saw EEZ keeps "scoring" on the narrow band saws to the minimum. In most cases it increases saw life about four times and leaves a smoother, cleaner sawed surface.

DoALL SAW LUBRICATOR

The **DoALL** saw lubricator is designed to give a controlled flow of lubricant at the point of work. This will increase the saw life and speed of cutting, and give a finer finish.

A bracket is provided for mounting the one-quart container which holds the lubricant. This bracket should be installed on the panel of the post-adjusting side of the machine.

The lubricator is fastened to the post by means of the thumb set screw. The slide rod on the lubricator is adjustable for all saw widths and should be adjusted so that the copper tube outlet is just touching the edge of the saw teeth.

This will assure lubricant flowing on all sides of the saw. Adjust the sight feed valve to deliver not more than 10 drops per minute. Too much oil will cause the saw to slip off the lower wheel. Soluble oil and water or kerosene solutions are recommended. It is not good

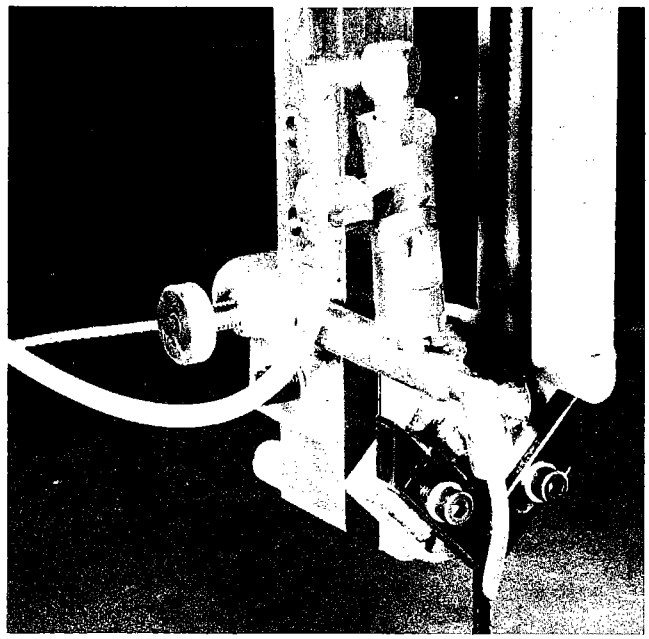

Figure 51

practice to use lubricant on cast iron, fibers and plastics.

ETCHING PENCIL

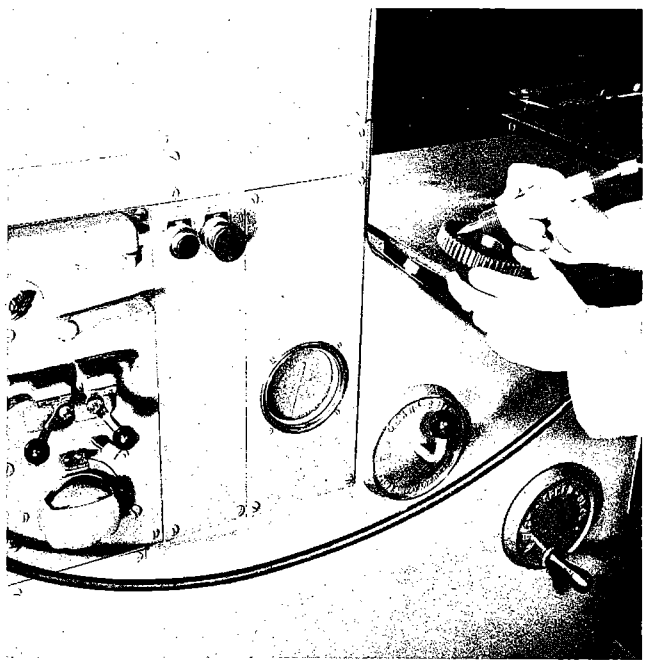

Figure 52

The etching pencil is used with the butt welder to mark the jobs finished on the

DoALL or any tools, jigs, fixtures, templates, etc.

Instructions for applying the etching pencil are as follows:

1. Clamp the terminal strip of the etching pencil in the stationary jaw.

2. Depress the anneal and etching switch and clamp the button down with the etching pencil clamp. This closes the circuit through the welder and also grounds the etching current through the machine.

3. Place the work to be marked on the table of the machine. Since the machine is "grounded" there is no second lead required to the work.

4. Etch with sufficient pressure to prevent the point from arcing, but not great enough to destroy the copper point.

5. The copper point should be kept sharp to secure best results.